Hawa
Sliding Solutions

On buildings

Architectural hardware for sliding shutters

Hawa Frontslide
Hawa Frontslide Matic
Hawa Frontego
Hawa Aperto

www.hawa.com

Quality, Support and Service

About Hawa Sliding Solutions

Our metier since 1965 has been pivoting, sliding and folding hardware systems – along with the fascinating applications they have opened for our customers. Thus, we have grown into a name of international repute within our specialist areas of glass/metal/wood architectural hardware, and hardware for furniture.
We – and hence our customers – are totally committed to Swiss quality. Despite the fact that we now export over 80 % of our output, production is located at home in Mettmenstetten. This is not least because our business philosophy is still based on characteristically Swiss values like precision, reliability, and durability.

About this catalogue

Designing façades, screening from view and the sun, solving problems, saving time – our hardware carries an impact that reaches far beyond its essential sliding, stacking and folding functionality. This catalogue provides you with detailed ordering information and technical data for our entire range of sliding shutters folding and sliding hardware systems. And should you have a specific requirement in the pipeline, please contact us – we are happy to be of help.

Find out about the rest of the Hawa range:

Architectural hardware glass/metal

- Glass sliding doors with patch suspension
- Glass sliding doors with suspension/retainer profiles
- Glass sliding walls
- Metal sliding doors

Catalogue order no: 15752

Architectural hardware wood

- Sliding doors
- Folding/Centre fold «Accordion» wall
- Wood sliding partitions
- Windows

Catalogue order no: 15625

Furniture hardware wood

- Sliding cabinet/wardrobe doors
- Side stacking cabinet/wardrobe doors
- Pivot sliding furniture doors
- Folding cabinet/wardrobe doors, panels can be moved freely to and fro
- Folding cabinet/wardrobe doors

Catalogue order no: 15282

Content

Pages 6 – 7
Overview of the hardware for folding and sliding shutters

Pages 8 – 21
Manual sliding shutters

Pages 22 – 41
Automatic sliding shutters

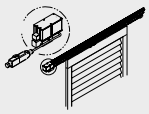

Pages 42 – 45
Sliding shutters – Bottom guides / Locking mechanisms

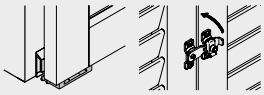

Pages 46 – 51
Automatic folding sliding shutters

Pages 52 – 53
Stacking sliding shutters

Product index

	Recommended applications in			For external use		Curved installations	Mode of fixing	
	Residential buildings	Public buildings	Industrial buildings	Non coastal areas	Coastal areas	Minimum radius mm/inch	Wall fitting	Ceiling fitting
Manual sliding shutters 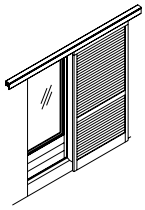								
	●	●	●	●	❶		●	●
	●	●	●	●	❶		●	●
	●	●	●	●	❶		●	●
	●	●	●	●	❶		●	●
Sliding shutters 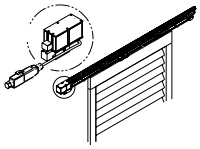	●	●	●	●	❶		●	●
	●	●	●	●	❶		●	●
	●	●	●	●	❶		●	●
Automatic folding sliding shutters 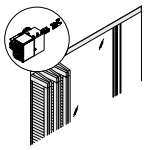	●	●	●	●	●			●
Stacking sliding shutters 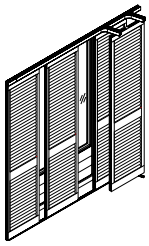	●	●	●	●	❶	2000 (6'6 3/4")		●
Accessories 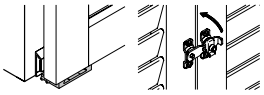								

❶ possible under certain conditions

Mode of system		www.hawa.com					
manual	automatic	Hawa Productfinder → full information	Hawa Systemplanner → planning and quoting	Hardware systems	Maximum door weight		Pages
				Overview of the hardware for folding and sliding shutters			6
●		●	●	Hawa Frontslide 60/100/140 A	60/100/140 kg	132/220/308 lbs.	8
●		●	●	Hawa Frontslide 60/100/140 A Symmetric	60/100/140 kg	132/220/308 lbs.	10
●		●	●	Hawa Frontslide 60/100/140 A Telescopic	60/100/140 kg	132/220/308 lbs.	14
●		●	●	Hawa Frontslide 60 B	60 kg	132 lbs.	20
	●	●	●	Hawa Frontslide 60/100/140 Matic	60/100/140 kg	132/220/308 lbs.	22
	●	●	●	Hawa Frontslide 60/100/140 Matic Symmetric	60/100/140 kg	132/220/308 lbs.	26
	●	●	●	Hawa Frontslide 60/100/140 Matic Telescopic	60/100/140 kg	132/220/308 lbs.	32
	●			Hawa Frontego 30 Matic	30 kg	66 lbs.	46
●				Hawa Aperto 60 H – Bespoke solutions	60 kg	132 lbs.	52
				Top tracks, covering screens and angles			36
				Guides			42
				Locking mechanisms, Hawa bar bolt lock			44

Summary

Manual	Max. weight per sliding shutter kg	Lower top track mm	Sliding shutter thickness mm	Min. sliding shutter width mm	Max. sliding shutter width mm	Max. sliding shutter height mm	Max. installation width mm	Max. area per sliding shutter m^2
Hawa Frontslide 60 A	60		28–45	400	–	3200	–	
Hawa Frontslide 100 A	100		28–50	500	–	3200	–	–
Hawa Frontslide 140 A	140		28–60	700	–	3200	–	–
Hawa Frontslide 60 A Lower top track	60	37	min. 28	400	–	3200	–	
Hawa Frontslide 100 A Lower top track	100	47	min. 28	500	–	3200	–	–
Hawa Frontslide 60 A Symmetric 2	60		28–45	500	–	3200	6000	
Hawa Frontslide 100 A Symmetric 2	100		28–50	550	–	3200	6000	–
Hawa Frontslide 140 A Symmetric 2	140		28–60	700	–	3200	6000	–
Hawa Frontslide 60 A Symmetric 2+2	40		28–40	550	1000	3200	6000	
Hawa Frontslide 100 A Symmetric 2+2	70		28–40	600	1000	3200	6000	–
Hawa Frontslide 60 A Telescopic 2	60		28–40	550	1200	3200	–	
Hawa Frontslide 100 A Telescopic 2	100		28–40	600	1200	3200	–	–
Hawa Frontslide 140 A Telescopic 2	140		28–40	700	1200	3200	–	–
Hawa Frontslide 60 A Telescopic 3	60		28–40	550	1200	3200	–	
Hawa Frontslide 100 A Telescopic 3	100		28–40	600	1200	3200	–	–
Hawa Frontslide 60 A Telescopic 4	60		28–40	550	1200	3200	–	
Hawa Frontslide 100 A Telescopic 4	100		28–40	600	1200	3200	–	–
Hawa Frontslide 60 B	60	37	28–40	400	–	3200		
Hawa Aperto 60 H	60		35–50	550	950	2600		

Automatic	kg	mm	mm	mm	mm	mm	mm	m^2
Hawa Frontslide 60 Matic	60		28–45	600	–	3200	7500	6.24
Hawa Frontslide 100 Matic	100		28–50	650	–	3200	7500	6.24
Hawa Frontslide 140 Matic	140		28–60	750	–	3200	7500	6.24
Hawa Frontslide 60 Matic Symmetric 2	60		28–45	550	–	3200	7500	6.24
Hawa Frontslide 100 Matic Symmetric 2	80		28–50	600	–	3200	7500	6.24
Hawa Frontslide 140 Matic Symmetric 2	100		28–60	750	–	3200	7500	6.24
Hawa Frontslide 60 Matic Symmetric 2+2	40		28–40	650	1200	3200	–	–
Hawa Frontslide 100 Matic Symmetric 2+2	70		28–40	650	1200	3200	–	–
Hawa Frontslide 60 Matic Telescopic 2	60		28–40	650	1200	3200	–	–
Hawa Frontslide 100 Matic Telescopic 2	90		28–40	650	1200	3200	–	–
Hawa Frontslide 140 Matic Telescopic 2	140		28–40	750	1200	3200	–	–
Hawa Frontslide 60 Matic Telescopic 3	50		28–40	650	1200	3200	–	–
Hawa Frontslide 100 Matic Telescopic 3	80		28–40	650	1200	3200	–	–
Hawa Frontslide 60 Matic Telescopic 4	40		28–40	650	1200	3200	–	–
Hawa Frontslide 100 Matic Telescopic 4	70		28–40	650	1200	3200	–	–
Hawa Frontego 30 Matic	30		28–32	300	600	3200	–	–

Metric measurements apply – those in inches are for information only and can be found on the corresponding pages.

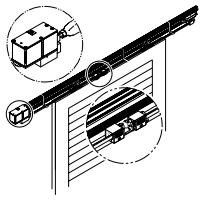

Hawa Frontslide Matic

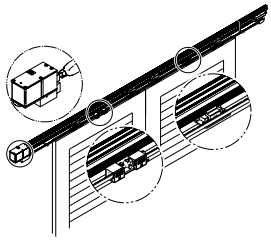

Hawa Frontslide Matic Symmetric

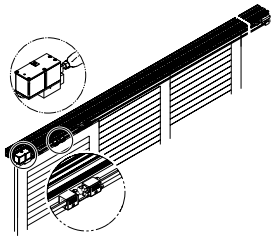

Hawa Frontslide Matic Telescopic

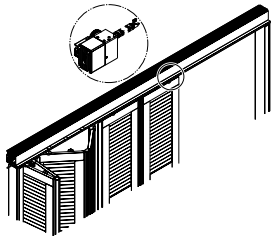

Hawa Frontego 30 Matic

Possible positions for the drive unit

	Maximum number and weight of the sliding shutters	Installation instructions	Drive unit
Hawa Frontslide 60/100/140 Matic	1 at 60 kg (1 at 132 lbs.) 1 at 100 kg (1 at 220 lbs.) 1 at 140 kg (1 at 308 lbs.)	24991	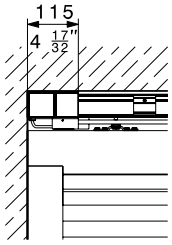
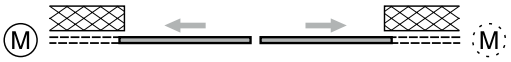 Hawa Frontslide 60/100/140 Matic Symmetric 2	2 at 60 kg (2 at 132 lbs.) 2 at 80 kg (2 at 176 lbs.) 2 at 100 kg (2 at 220 lbs.)	24992	
Hawa Frontslide 60/100/140 Matic Telescopic 2	2 at 60 kg (2 at 132 lbs.) 2 at 90 kg (2 at 198 lbs.) 2 at 140 kg (2 at 308 lbs.)	24994	
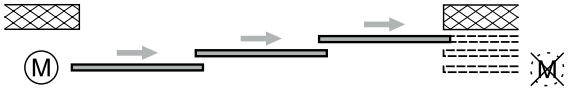	3 at 50 kg (3 at 110 lbs.) 3 at 80 kg (3 at 176 lbs.)	24995	
Hawa Frontslide 60/100 Matic Telescopic 3 and 4	4 at 40 kg (4 at 88 lbs.) 4 at 70 kg (4 at 154 lbs.)	24996	
Hawa Frontslide 60/100 Matic Symmetric 2+2	4 at 40 kg (4 at 88 lbs.) 4 at 70 kg (4 at 154 lbs.)	24993	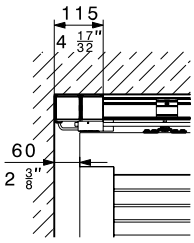
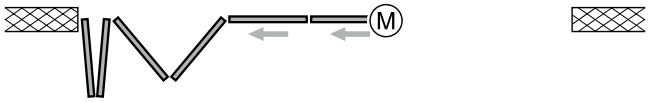 Hawa Frontego 30 Matic	6 à 30 kg (6 at 66 lbs.)	available on special equest	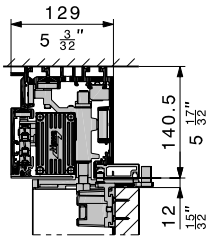

Subject to modification. Metric specifications are exact. Inches are approximate.

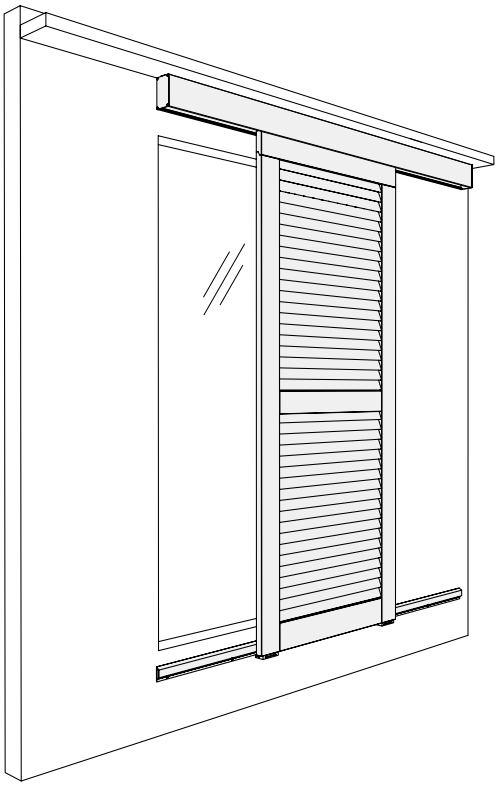

Sliding shutters for a functional façade finish.

Hardware system for wood, metal or aluminium sliding shutters with a panel weight up to 60 kg (132 lbs.)

Zum Produkt

Hawa Frontslide 60 A is a dependable hardware system for manually-operated sliding shutters, with different fitting options. Attached to the ceiling or window lintel, the top track screws directly to the load-bearing surface. An angled profile support is available for wall fitting, whereby the top track secures to the support profile using special assembly screws supplied by Hawa. On the aesthetic side, aluminium covering screens in natural anodized or plain finishes for custom painting simply clip-on to the inside or outside edges of the top track. In buildings with an air gap behind the façade, open window shutters can slide out of sight into the void between the building wall and the façade.

Applications

Ideal in building façades designed for privacy and shade, and where space is at a premium, e.g. schools, hotels, public buildings, office premises, low-energy homes, etc.

Features of the Hawa Frontslide 60 A

- Maximum sliding shutter weight: 60 kg (132 lbs.)
- Sliding shutter thickness: 28–45 mm ($1\frac{1}{8}$"–$1\frac{25}{32}$")
- Minimum sliding shutter width: 400 mm ($15\frac{3}{4}$")
- Maximum sliding shutter hight: 3200 mm (10'$6\frac{3}{4}$")
- Class 4 corrosion resistance in accordance with EN 1670 (extremely high resistance)
- Corrosion-resistant materials
- Fast and efficient assembly from below and from the façade side
- Clip-on covers for inside or outside attachment
- The sliding shutters can be moved into any position
- For wood, metal or aluminium sliding shutters
- Different design options of bottom guides
- External tests certify the highest wind resistance (Class 6 in accordance with EN 13659)

Ceiling or window lintel fitting

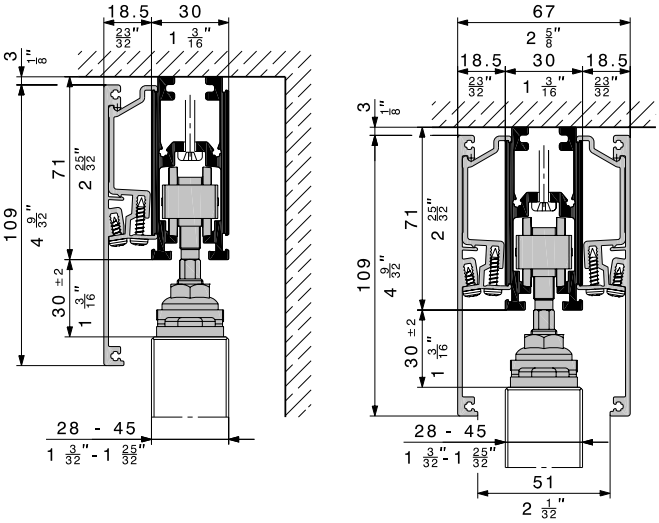

Wall fitting

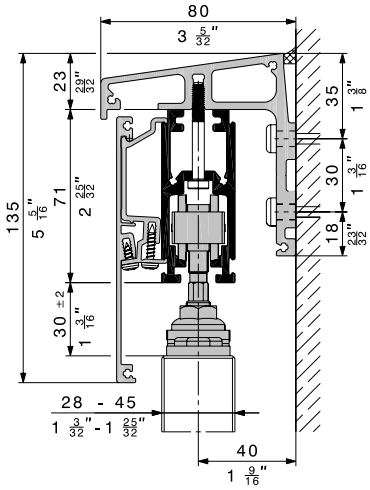

Angled profile support for one sliding level

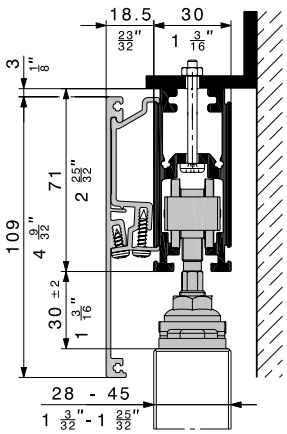

Fixing bracket provided by customer

Subject to modification. Metric specifications are exact. Inches are approximate.

Set without top tracks and bottom guide channels

	code
Hawa Frontslide 60 A, partial set for 1 sliding shutter	25117

Set comprising

Caution: Hole positions vary.		piece	code
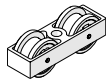	Two-wheeled trolley, M8, with plastic wheels	2	17119
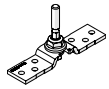	Top fixing plate, stainless steel, with hanger bolt M8	2	24562
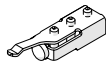	Track stop with adjustable retainer	2	17027

Top tracks for installations with or without covering screens

Caution: Hole positions vary.		mm	code
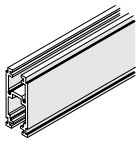	Top track, alu plain anodized, predrilled	3500 (11'5 13/16")	24839
		6000 (19'8 7/32")	24795
		cut to size	24796
	Connecting bolts, set of 6 pieces		17221

Calculation for suspension points

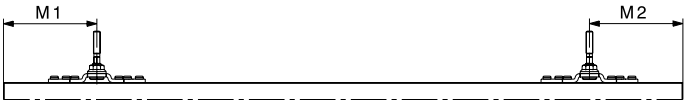

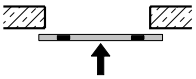

60 A	M1	M2
	110 mm (4 11/32")	110 mm (4 11/32")

Calculation for sliding shutter width

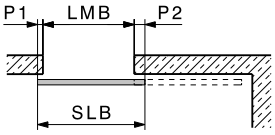

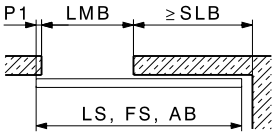

SLB = LMB + P1 + P2

LS = (2 x SLB) – P2
FS = LS

AB	Installation width
LMB	Entire opening width
FS	Bottom guide channel
SLB	Sliding shutter width
P	Sliding shutter overlap
LS	Top track

Order specifications

- Number of sets
- Number and length of top tracks
- For wall fittings:
  – Number, length and type of angled profile support
  – Number of special fixing screw sets
- Number, length and type of covering screens
- Number of fitting parts to covering screens
- Number and type of guides

Optional order specifications

- Number, length and type of spacer profiles for angled profile support
- Number and type of front cover plates
- Number of connecting bolt sets to profiles and covering screens
- Number and type of sliding shutter locking mechanisms

Top tracks, covering screens and brackets

Top tracks and covering screens: → pages 36–37

Guides and locking mechanisms

Bottom guides and locking mechanisms: → pages 42–44

Planning/installation

For planning and installation purposes, please use the installation drawing code 24984. (→ www.hawa.com → Hawa Productfinder)

Subject to modification. Metric specifications are exact. Inches are approximate.

Hawa Frontslide 60 A Symmetric 2

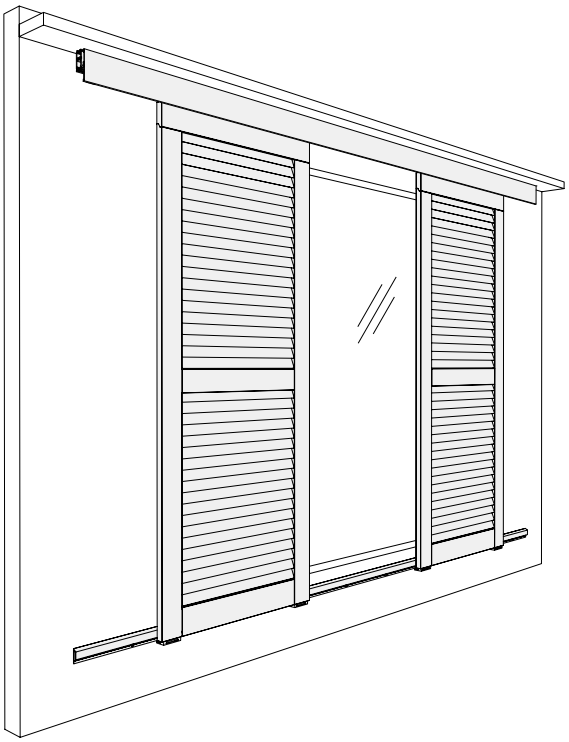

Sliding shutters moved symmetrically.

Hardware for 2 sliding wood, metal or aluminium shutters of up to 60 kg (132 lbs.), opening simultaneously left and right.

Description

Hawa Frontslide 60 A Symmetric 2 is a dependable hardware system for manually-operated sliding shutters, with different fitting options. Attached to the ceiling or window lintel, the top track screws directly to the load-bearing surface. An angled profile support is available for wall fitting, whereby the top track secures to the support profile using special assembly screws supplied by Hawa. On the aesthetic side, aluminium covering screens in natural anodized or plain finishes for custom painting simply clip-on to the inside or outside edges of the top track. The system offers a further plus-point with the toothed belt, where a single movement can operate a pair of shutters in symmetry. In buildings with an air gap behind the façade, open window shutters can slide out of sight into the void between the building wall and the façade.

Applications

Ideal in building façades designed for privacy and shade, and where space is at a premium, e.g. schools, hotels, public buildings, office premises, low-energy homes, etc.

Features of the Hawa Frontslide 60 A Symmetric 2

- Maximum sliding shutter weight: 60 kg (132 lbs.)/shutter
- Sliding shutter thickness: 28–45 mm ($1\frac{1}{8}$"–$1\frac{25}{32}$")
- Minimum sliding shutter width: 500 mm ($19\frac{11}{16}$")
- Maximum sliding shutter hight: 3200 mm (10'$6\frac{3}{4}$")
- Maximum installation width: 6000 mm (19'$8\frac{7}{32}$")
- Class 4 corrosion resistance in accordance with EN 1670 (extremely high resistance)
- Fibreglass-reinforced toothed belts guarantee high tensile strength and a low level of expansion
- Shutters can be removed without loosening the toothed belt
- Fast and efficient assembly from below and from the façade side
- Clip-on covers for inside or outside attachment
- The sliding shutters can be moved symmetrically into any position
- For wood, metal or aluminium sliding shutters
- Different design options of bottom guides
- External tests certify the highest wind resistance (Class 6 in accordance with EN 13659)

Toothed belt lock and driver

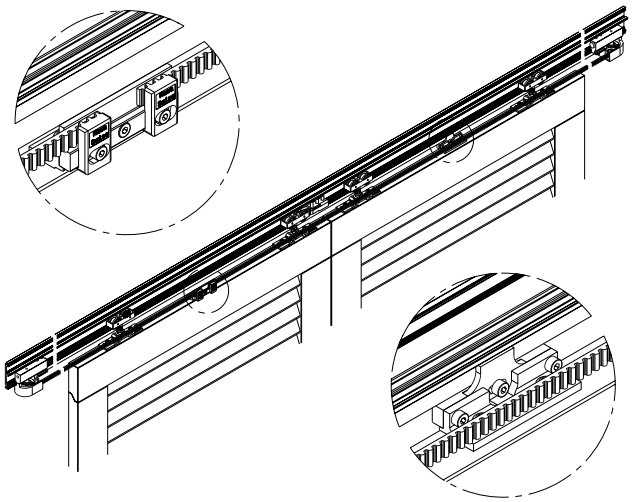

Subject to modification. Metric specifications are exact. Inches are approximate.

Set without top tracks and bottom guide channels

	code
Hawa Frontslide 60 A Symmetric 2, partial set for 2 sliding shutters	25118

Set comprising

		pieces	code
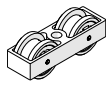	Two-wheeled trolley, M8, with plastic wheels	4	17119
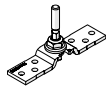	Top fixing plate, stainless steel, with hanger bolt M8	4	24562
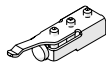	Track stop with adjustable retainer	1	17027
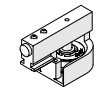	Guide pulley wheel matching with top track Hawa Frontslide 60/100/140	2	24793
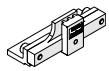	Driver, laterally adjustable for manual systems	1	20353
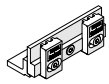	Toothed belt lock for manual systems	1	20352

Toothed belt

		length	code
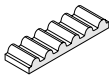	Toothed belt, black, fibre glass reinforced	5 m (16'4 27/32")	19667
		8 m (26'2 31/32")	19682
		10 m (32'9 23/32")	19668
		15 m (49'2 9/16")	20370
		50 m (164' 1/2")	19669
Length of toothed belt = 2 x top track			

Calculation for suspension points

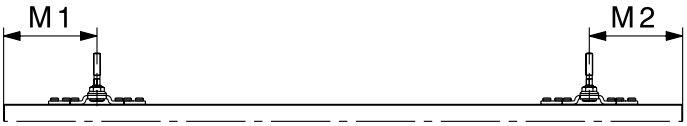

60 A	M1	M2
SL1	150 mm (5 23/32")	100 mm (3 15/16")
SL2	100 mm (3 15/16")	150 mm (5 23/32")

Calculation for sliding shutter width

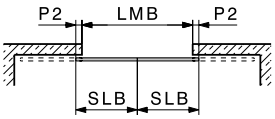

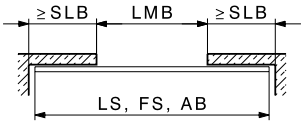

$$SLB = \frac{LMB}{2} + P2$$

$$LS = LMB + (2 \times SLB)$$

AB	Installation width
LMB	Entire opening width
SLB	Sliding shutter width
P	Sliding shutter overlap
FS	Bottom guide channel
LS	Top track

Order specifications

- Number of sets
- Number and length of top tracks
- For wall fittings:
  – Number, length and type of angled profile support
  – Number of special fixing screw sets
- Number, length and type of covering screens
- Number of fitting parts to covering screens
- Number and type of guides

Optional order specifications

- Number and length of spacer profiles for angled profile support
- Number and type of front cover plates
- Number of connecting bolt sets to profiles and covering screens
- Number and type of sliding shutter locking mechanisms

Top tracks, covering screens and brackets

Top tracks and covering screens: → pages 36–37

Guides and locking mechanisms

Bottom guides and locking mechanisms: → pages 42–44

Planning/installation

For planning and installation purposes, please use the installation drawing code 24986. (→ www.hawa.com → Hawa Productfinder)

Subject to modification. Metric specifications are exact. Inches are approximate.

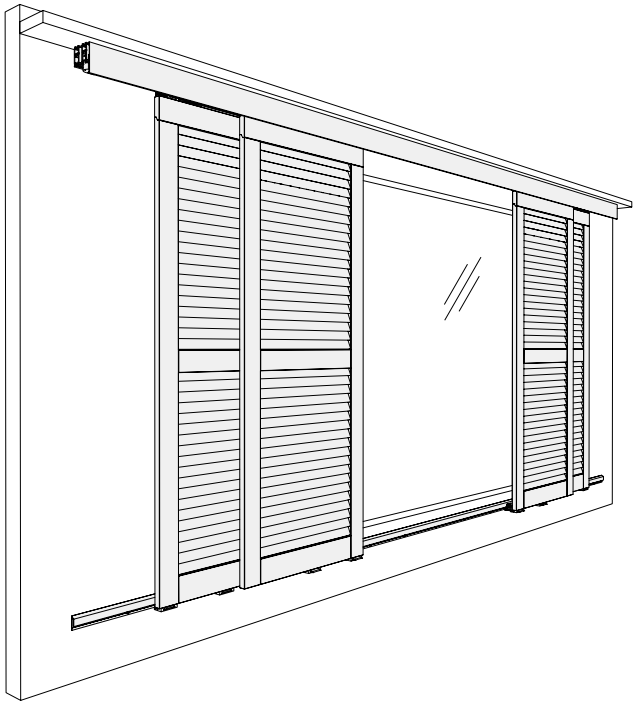

4 Sliding shutters moved symmetrically.

Hardware for 4 sliding wood, metal or aluminium shutters of up to 40 kg (88 lbs.), opening simultaneously left and right.

Description

Hawa Frontslide 60 A Symmetric 2+2 is a dependable hardware system for manually-operated sliding shutters, with different fitting options. Attached to the ceiling or window lintel, the top track screws directly to the load-bearing surface. An angled profile support is available for wall fitting, whereby the top track secures to the support profile using special assembly screws supplied by Hawa. On the aesthetic side, aluminium covering screens in natural anodized or plain finishes for custom painting simply clip-on to the inside or outside edges of the top track. The system offers a further plus-point with the toothed belt, where a single movement can operate four shutters in symmetry. In buildings with an air gap behind the façade, open window shutters can slide out of sight into the void between the building wall and the façade.

Applications

Ideal in building façades designed for privacy and shade, and where space is at a premium, e.g. schools, hotels, public buildings, office premises, low-energy homes, etc.

Features of the Hawa Frontslide 60 A Symmetric 2+2

- Maximum sliding shutter weight: 40 kg (88 lbs.)/shutter
- Sliding shutter thickness: 28–40 mm ($1\frac{1}{8}$"–$1\frac{19}{32}$")
- Minimum sliding shutter width: 500–1000 mm (1'9$\frac{21}{32}$"–3'3$\frac{3}{8}$")
- Maximum sliding shutter hight: 3200 mm (10'6$\frac{3}{4}$")
- Maximum installation width: 6000 mm (19'8$\frac{7}{32}$")
- Class 4 corrosion resistance in accordance with EN 1670 (extremely high resistance)
- Fibreglass-reinforced toothed belts guarantee high tensile strength and a low level of expansion
- Shutters can be removed without loosening the toothed belt
- Fast and efficient assembly from below and from the façade side
- Clip-on covers for inside or outside attachment
- The sliding shutters can be moved symmetrically into any position
- For wood, metal or aluminium sliding shutters
- Different design options of bottom guides
- External tests certify the highest wind resistance (Class 6 in accordance with EN 13659)

Wall fitting

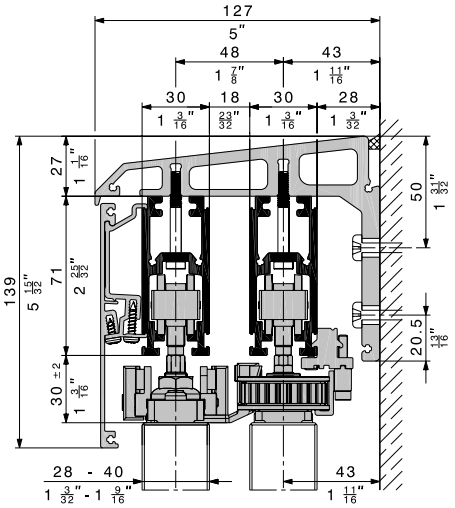

Ceiling or window lintel fitting

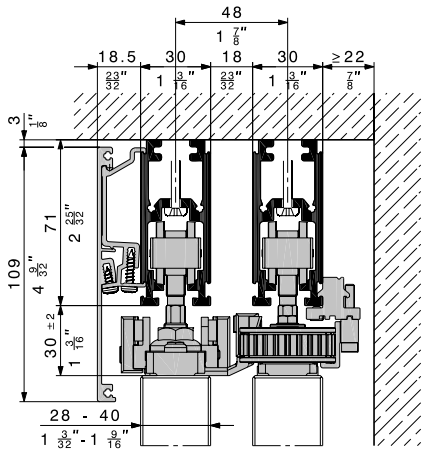

Subject to modification. Metric specifications are exact. Inches are approximate.

Set without top tracks and bottom guide channels

	code
Hawa Frontslide 60 A Symmetric 2+2, partial set for 4 sliding shutters	25119

Set comprising

		pieces	code
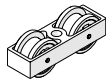	Two-wheeled trolley, M8, with plastic wheels	8	17119
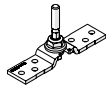	Top fixing plate, stainless steel, with hanger bolt M8	8	24562
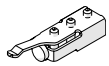	Track stop with adjustable retainer	3	17027
	Guide pulley wheel matching with top track Hawa Frontslide 60/100/140	2	24793
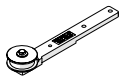	Guide pulley wheel, with fixing plate, long	2	20139
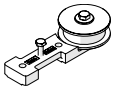	Guide pulley wheel, with fixing plate, short	2	20140
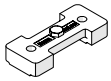	Driver counter-plate, wide	2	20246
	Driver, wide	2	20141
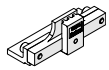	Driver, laterally adjustable for manual systems	1	20353
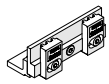	Toothed belt lock for manual systems	1	20352
	Toothed belt clamp for manual and automatic systems	1	24777
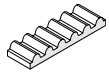	Toothed belt, black, 2,7 m (8'10 5/16"), fibreglass reinforced	2	

Toothed belt

		length	code
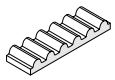	Toothed belt, black, fibre glass reinforced	5 m (16'4 27/32")	19667
		8 m (26'2 31/32")	19682
		10 m (32'9 23/32")	19668
		15 m (49'2 9/16")	20370
		50 m (164'1/2")	19669
Toothed belt length, outer sliding level = 2 x top track			

Calculation for sliding shutter width

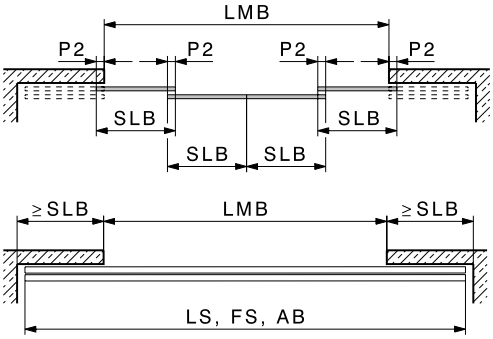

$$SLB = \frac{LMB}{4} + P2$$

P2 ≥ 50 mm (1 31/32")

LS = LMB + (2 x SLB)

AB	Installation width
LMB	Entire opening width
SLB	Sliding shutter width
P	Sliding shutter overlap
FS	Bottom guide channel
LS	Top track

Calculation for suspension points

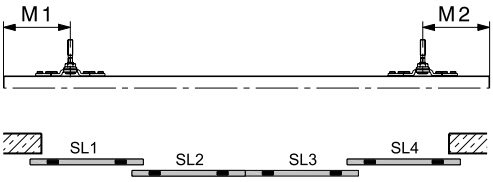

60 A	M1	M2
SL1	160 mm (6 5/16")	160 mm (6 5/16")
SL2	180 mm (7 3/32")	100 mm (3 15/16")
SL3	100 mm (3 15/16")	180 mm (7 3/32")
SL4	160 mm (6 5/16")	160 mm (6 5/16")

Order specifications

- Number of sets
- Number and length of top tracks
- Number and length of toothed belt
- For wall fittings:
  – Number, length and type of angled profile support
  – Number of special fixing screw sets
- Number, length and type of covering screens
- Number of fitting parts to covering screens
- Number and type of guides

Optional order specifications

- Number and type of front cover plates
- Number of connecting bolt sets to profiles and covering screens
- Number and type of sliding shutter locking mechanisms

Top tracks, covering screens and brackets

Top tracks and covering screens: → pages 36–37

Guides and locking mechanisms

Bottom guides and locking mechanisms: → pages 42–44

Planning/installation

For planning and installation purposes, please use the installation drawing code 24987. (→ www.hawa.com → Hawa Productfinder)

Subject to modification. Metric specifications are exact. Inches are approximate.

A lot of motion with a single slide.

Hardware for simultaneously sliding up to 4 wood, metal or aluminium shutters of up to 60 kg (132 lbs.).

Description

Hawa Frontslide 60 A Telescopic is a reliable hardware system with modest space requirements for screening large window areas with manually operated sliding shutters. The shutters slide simultaneously into the open and closed position thanks to a toothed belt. And without any banging noises caused by colliding catches.
An angled profile support is available for mounting two-panelled Hawa Telescopic systems to the wall. In this case, the top track is fastened to the angled profile support using special mounting screws from Hawa. Aluminium covering screens in either natural anodized or plain finishes ready for custom painting provide aesthetic appeal and are easily clipped on to the inside or outside of the top track. In buildings with ventilated cladding, open windows shutters can slide out of sight into the space between the building wall and the cladding.

Applications

Ideal for façades with a high proportion of glass, wherever screening and shade form part of the façade design, and where space is at a premium, e.g. schools, hotels, public buildings, office and administration premises, apartment buildings, low-energy houses, etc.

Features of the Hawa Frontslide 60 A Telescopic

- Max. sliding shutter weight with 2 shutters: 60 kg (132 lbs.)/shutter
- Max. sliding shutter weight with 3 shutters: 60 kg (132 lbs.)/shutter
- Max. sliding shutter weight with 4 shutters: 60 kg (132 lbs.)/shutter
- Sliding shutter thickness: 28–40 mm ($1\frac{1}{8}$"–$1\frac{19}{32}$")
- Sliding shutter width: 500–1200 mm (1'$9\frac{21}{32}$"–3'$11\frac{1}{4}$")
- Maximum sliding shutter hight: 3200 mm (10'6)
- Class 4 corrosion resistance in accordance with EN 1670 (extremely high resistance)
- Fibreglass-reinforced toothed belts guarantee high tensile strength and a low level of expansion
- Shutters can be removed without loosening the toothed belt
- The sliding shutters can be moved telescopically into any position
- Fast and efficient assembly from below and from the façade side
- Clip-on covers for inside or outside attachment
- For wood, metal or aluminium sliding shutters
- Different design options of bottom guides
- External tests certify the highest wind resistance (Class 6 in accordance with EN 13659)

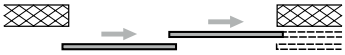

Hawa Frontslide 60 A Telescopic 2

Hawa Frontslide 60 A Telescopic 3

Hawa Frontslide 60 A Telescopic 4

Subject to modification. Metric specifications are exact. Inches are approximate.

Sets without top tracks and bottom guide channels

	code
Hawa Frontslide 60 A Telescopic 2, set for 2 sliding shutters, 550–1200 mm (1'9 21/32"– 3'11 1/4")	25120
Hawa Frontslide 60 A Telescopic 3, set for 3 sliding shutters, 550–1200 mm (1'9 21/32"– 3'11 1/4")	25121
Hawa Frontslide 60 A Telescopic 4, set for 4 sliding shutters, 550–1200 mm (1'9 21/32"– 3'11 1/4")	25122

Sets comprising

		25120	25121	25122	code
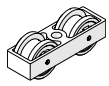	Two-wheeled trolley, M8, with plastic wheels	4	6	8	17119
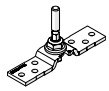	Top fixing plate, stainless steel, with hanger bolt M8	4	6	8	24562
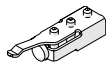	Track stop with adjustable retainer	2	2	2	17027
	Toothed belt clamp for manual and automatic systems	1	1	1	24777
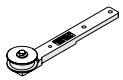	Guide pulley wheel, with fixing plate, long	1	2	3	20139
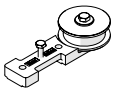	Guide pulley wheel, with fixing plate, short	1	2	3	20140
	Driver, wide	1	2	3	20141
	Driver, narrow	–	1	2	20142
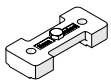	Driver counter-plate, wide	1	1	1	20246
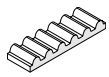	Toothed belt, black, 2,7 m (8'10 5/16"), fibreglass reinforced	1	2	3	20208

Two sliding shutters of up to 60 kg max. per panel

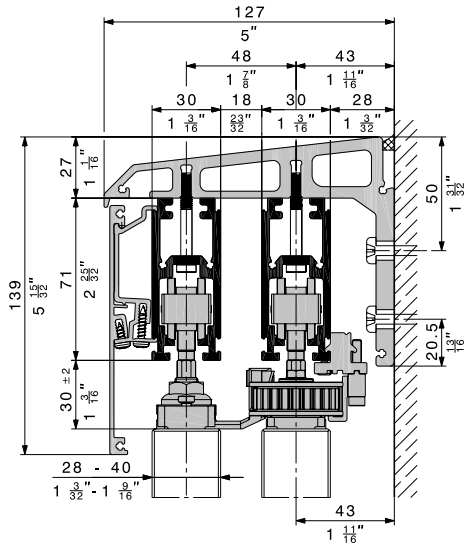

Three sliding shutters of up to 60 kg max. per panel

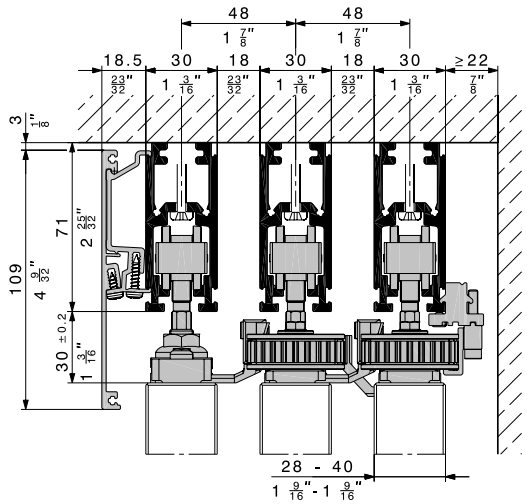

Four sliding shutters of up to 60 kg max. per panel

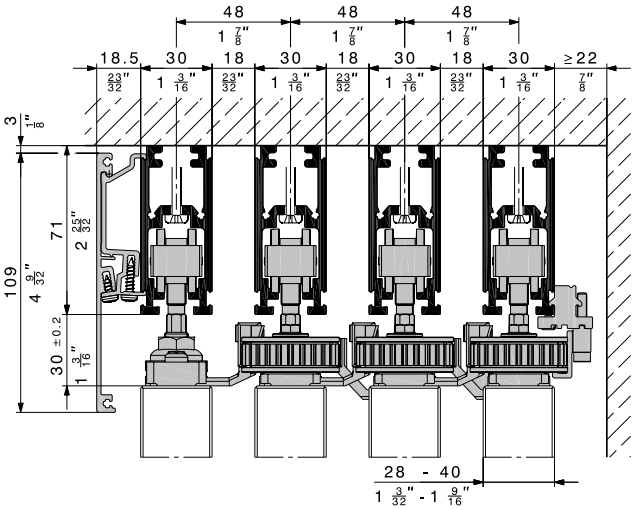

Subject to modification. Metric specifications are exact. Inches are approximate.

Calculation for sliding shutter width

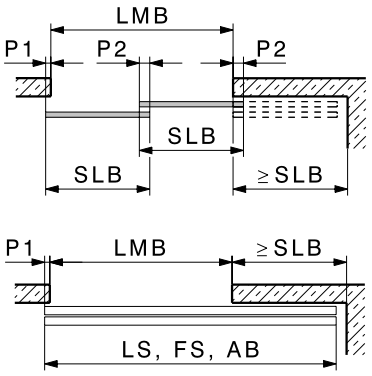

Hawa Frontslide 60 A Telescopic 2

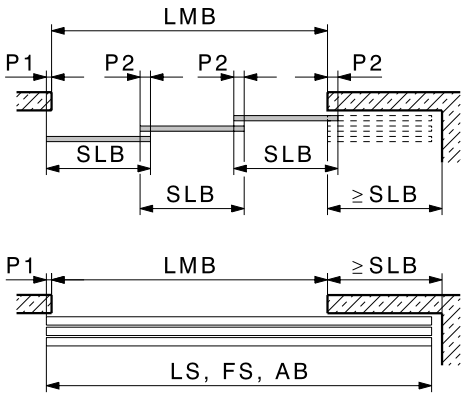

Hawa Frontslide 60 A Telescopic 3

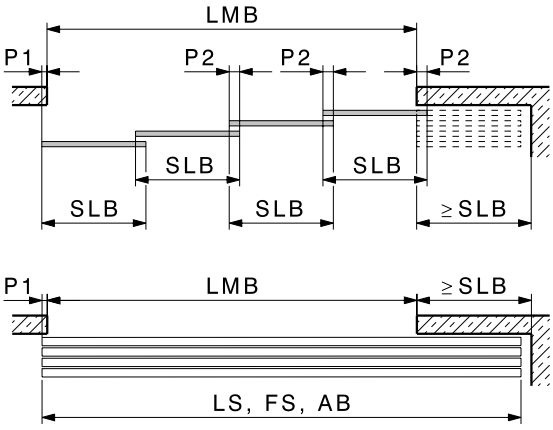

Hawa Frontslide 60 A Telescopic 4

$$SLB = \frac{LMB + P1}{AL} + P2$$

$P2 \geq 50$ mm ($1\frac{31}{32}$")

$LS = LMB + P1 + SLB$

AB	Installation width
LMB	Entire opening width
AL	Number of sliding shutters
SLB	Sliding shutter width
P	Sliding shutter overlap
LS	Top track
FS	Bottom guide channel

Calculation for suspension points

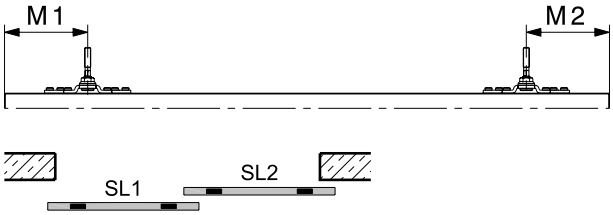

Hawa Frontslide 60 A Telescopic 2

60 A	M1	M2
SL1-2	160 mm ($6\frac{5}{16}$")	160 mm ($6\frac{5}{16}$")

Hawa Frontslide 60 A Telescopic 3

60 A	M1	M2
SL1-3	160 mm ($6\frac{5}{16}$")	160 mm ($6\frac{5}{16}$")

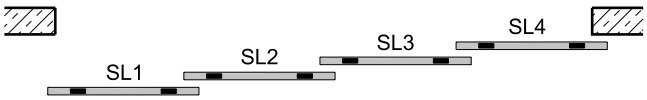

Hawa Frontslide 60 A Telescopic 4

60 A	M1	M2
SL1-4	160 mm ($6\frac{5}{16}$")	160 mm ($6\frac{5}{16}$")

Top tracks, covering screens and brackets

Top tracks and covering screens: → pages 36–37

Guides and locking mechanisms

Bottom guides and locking mechanisms: → pages 42–44

Order specifications

- Number and type of sets
- Number and length of top tracks
- For wall fittings:
  – Number, length and type of angled profile support
  – Number of special fixing screw sets
- Number, length and type of covering screens
- Number of fitting parts to covering screens
- Number and type of guides

Optional order specifications

- Number of connecting bolt sets to profiles and covering screens
- Number and type of front cover plates
- Number and type of sliding shutter locking mechanisms

Planning/installation

For planning and installation purposes, please use the installation drawings:

- Hawa Frontslide 60 A Telescopic 2 code 24988
- Hawa Frontslide 60 A Telescopic 3 code 24989
- Hawa Frontslide 60 A Telescopic 4 code 24990

Subject to modification. Metric specifications are exact. Inches are approximate.

Notes

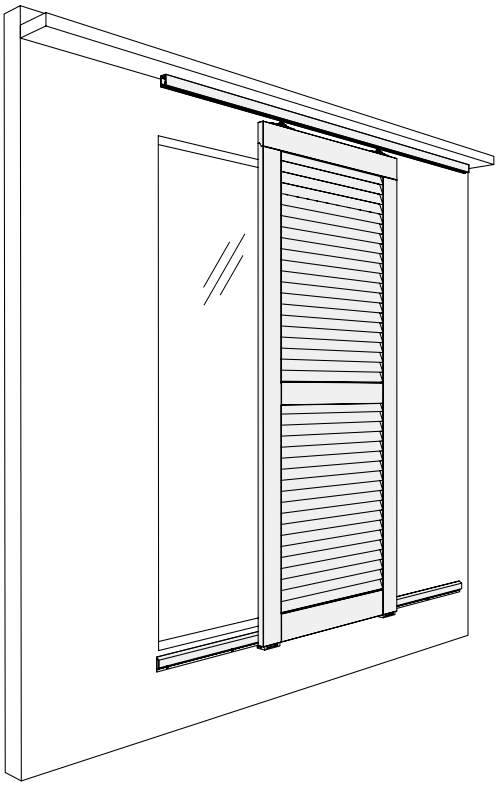

Sliding shutters for a functional façade finish.

Hardware system with lower top track for wood, metal or aluminium sliding shutters with a panel weight up to 60 kg (132 lbs.).

Description

Hawa Frontslide 60 A with lower top track, is a dependable hardware system for manually-operated sliding shutters, with different fitting options. Attached to the ceiling or window lintel, the top track screws directly to the load-bearing surface. A commercially available bracket may be used for wall mounting. In buildings with an air gap behind the façade, open window shutters can slide out of sight into the void between the building wall and the façade.

Applications

Ideal in building façades designed for privacy and shade, and where space is at a premium, e.g. schools, hotels, public buildings, office premises, low-energy homes, etc.

Features of the Hawa Frontslide 60 A with lower top track

- Maximum sliding shutter weight: 60 kg (132 lbs.)
- Lower top track hight: 37 mm ($11\frac{5}{32}$")
- Minimum sliding shutter thickness: 28 mm ($1\frac{1}{8}$")
- Minimum sliding shutter width: 400 mm ($15\frac{3}{4}$")
- Maximum sliding shutter hight: 3200 mm (10'6)
- Class 4 corrosion resistance in accordance with EN 1670 (extremely high resistance)
- Corrosion-resistant materials
- Fast and efficient assembly from below and from the façade side
- The sliding shutters can be moved into any position
- For wood, metal or aluminium sliding shutters
- Different design options of bottom guides
- External tests certify the highest wind resistance (Class 6 in accordance with EN 13659)

Ceiling or window lintel fitting

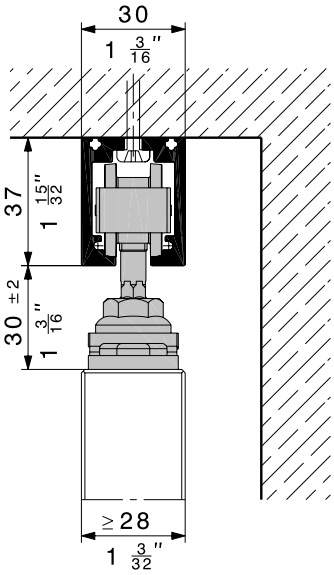

Wall fitting – solution provided by customer

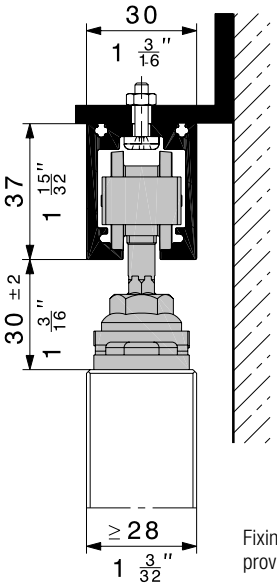

Fixing bracket provided by customer

Subject to modification. Metric specifications are exact. Inches are approximate.

Set without top tracks and bottom guide channels

	code
Hawa Frontslide 60 A, partial set for 1 sliding shutter with lower top track	25217

Set comprising

		pieces	code
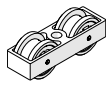	Two-wheeled trolley, M8, with plastic wheels	2	17119
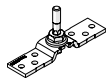	Top fixing plate, stainless steel, with hanger bolt M8 for lower top track	2	25196
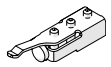	Track stop with adjustable retainer	2	17027

Lower top track

Caution: Hole positions vary.		mm/inch	code
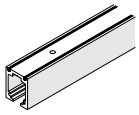	Lowor top track, alu plain anodized, predrilled	2500 (8'2 7/16")	24842
		6000 (19'8 7/32")	24802
		cut to size	24803
	Connecting bolts, set of 6 pieces		17221

Calculation for suspension points

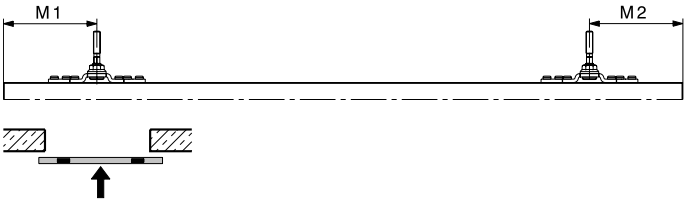

60 A	M1	M2
	110 mm (4 11/32")	110 mm (4 11/32")

Calculation for sliding shutter width

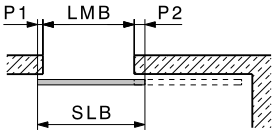

SLB = LMB + P1 + P2

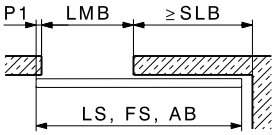

LS = (2 x SLB) – P2
FS = LS

AB	Installation width
LMB	Entire opening width
FS	Bottom guide channel
SLB	Sliding shutter width
P	Sliding shutter overlap
LS	Top track

Order specifications

- Number of sets
- Number and length of top tracks
- Number and type of guides

Optional order specifications

- Number of connecting bolt sets to top tracks
- Number and type of sliding shutter locking mechanisms

Guides and locking mechanisms

Bottom guides and locking mechanisms: → pages 42–44

Planning/installation

For planning and installation purposes, please use the installation drawing code 24984. (→ www.hawa.com → Hawa Productfinder)

Subject to modification. Metric specifications are exact. Inches are approximate.

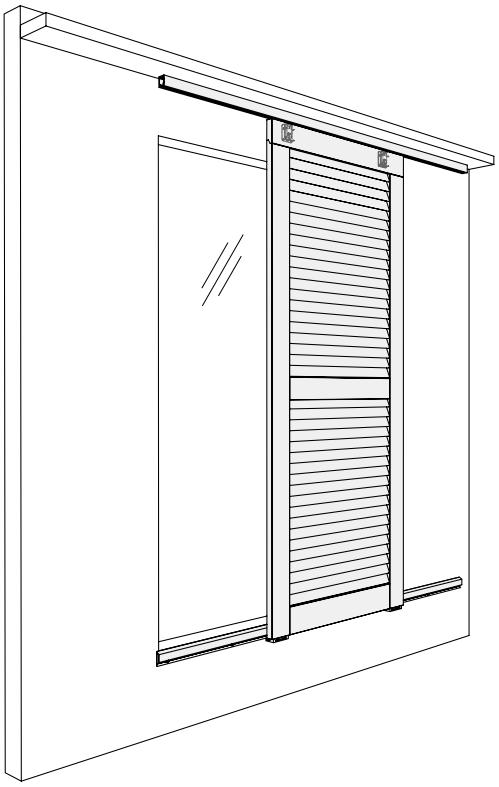

Sliding shutters made easy.

Hardware system with minimal installation height for wood or aluminium sliding shutters with a panel weight up to 60 kg (132 lbs.).

Description

Hawa Frontslide 60 B is a straightforward solution for manually operated sliding shutters. Covering screens are unnecessary, whether the hardware is fixed directly to the ceiling or to the fixing bracket support, provided by customer.
A patented suspension results in minimal installation height and allows shutters to be fitted, removed and height-adjusted from inside the room. Sliding shutters can be moved to any position, for privacy and shade. In buildings with an air gap behind the façade, open window shutters can slide out of sight into the void between the building wall and the façade.

Applications

Ideal in building façades designed for privacy and shade, and where space is at a premium, e.g. schools, hotels, public buildings, office premises, low-energy homes, etc.

Features of the Hawa Frontslide 60 B

- Minimal installation height thanks to patented suspension cups
- Maximum sliding shutter weight: 60 kg (132 lbs.)
- Lower top track hight: 37 mm ($11\frac{5}{32}$")
- Sliding shutter thickness: 28–40 mm ($1\frac{1}{8}$"–$1\frac{19}{32}$")
- Minimum sliding shutter width: 400 mm ($15\frac{3}{4}$")
- Maximum sliding shutter hight: 3200 mm (10'6)
- Class 4 corrosion resistance in accordance with EN 1670 (extremely high resistance)
- Corrosion-resistant materials
- Height adjustment and shutter removal from inside the room
- The sliding shutters can be moved into any position
- For wood or aluminium sliding shutters
- Different design options of bottom guides
- External tests certify the highest wind resistance (Class 6 in accordance with EN 13659)

Ceiling or window lintel fitting

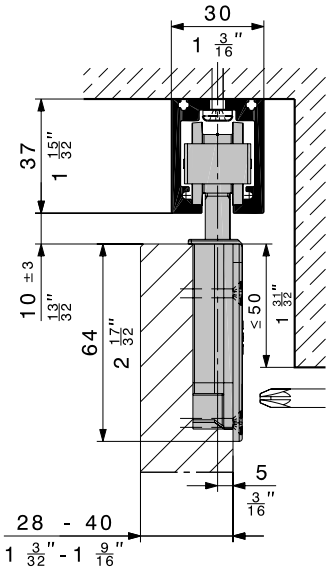

Sliding shutters can be fitted, removed and height-adjusted from inside the room.

Wall fitting – solution provided by customer

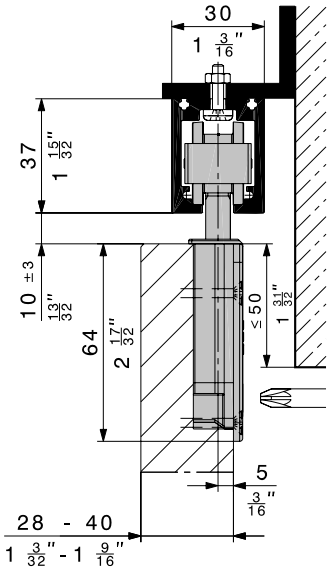

Fixing bracket provided by customer

Subject to modification. Metric specifications are exact. Inches are approximate.

Set for minimal installation height, without top tracks and bottom guide channels

	code
Hawa Frontslide 60 B, partial set for 1 sliding shutter	19871

Set comprising

		pieces	code
	Two-wheeled trolley, M8, with plastic wheels	2	17119
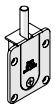	Concealed press-fit cup, alu, with hanger bolt M8	2	19900
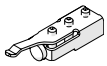	Track stop with adjustable retainer	2	17027

Lower top track

Caution: Hole positions vary.		mm/inch	code
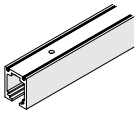	Lowor top track, alu plain anodized, predrilled	2500 (8'2 7/16")	24842
		6000 (19'8 7/32")	24802
		cut to size	24803
	Connecting bolts, set of 6 pieces		17221

Calculation for suspension points

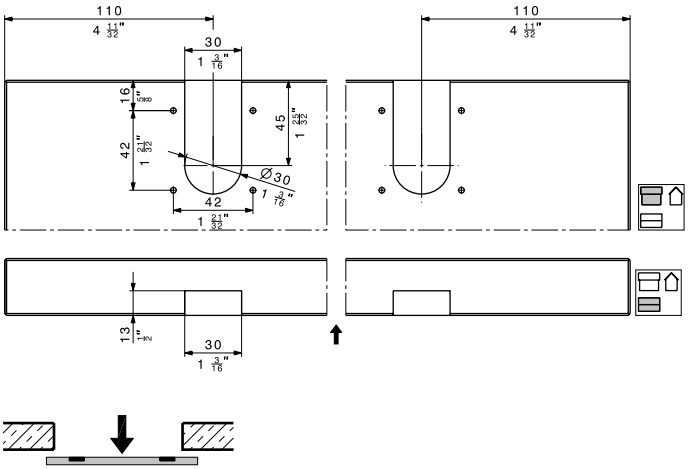

Calculation for sliding shutter width

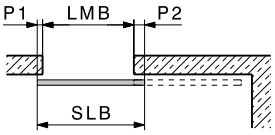

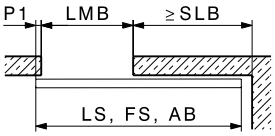

SLB = LMB + P1 + P2

LS = (2 x SLB) – P2
FS = LS

AB	Installation width
LMB	Entire opening width
FS	Bottom guide channel
SLB	Sliding shutter width
P	Sliding shutter overlap
LS	Top track

Order specifications

- Number of sets
- Number and length of top tracks
- Number and type of guides

Optional order specifications

- Number of connecting bolt sets to top tracks
- Number and type of sliding shutter locking mechanisms

Guides and locking mechanisms

Bottom guides and locking mechanisms: → pages 42–44

Planning/installation

For planning and installation purposes, please use the installation drawing code 24985. (→ www.hawa.com → Hawa Productfinder)

Subject to modification. Metric specifications are exact. Inches are approximate.

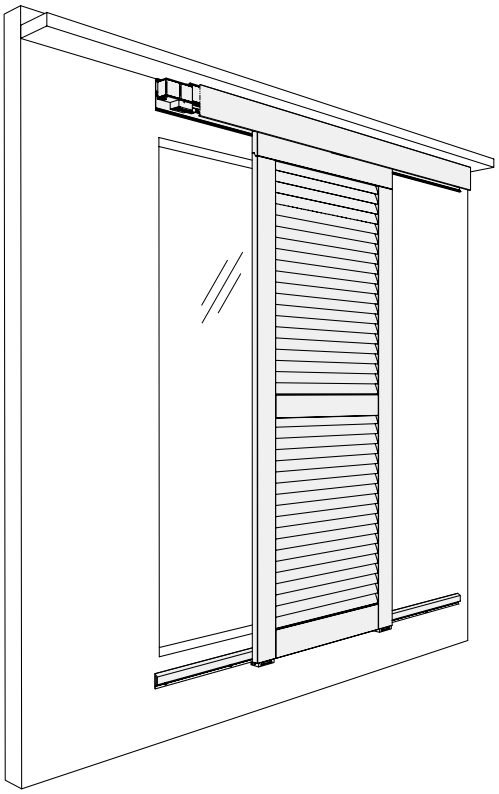

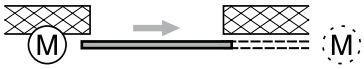

Sliding shutters – for automated convenience.

Hardware system for wood, metal or aluminium automatic sliding shutters with a panel weight up to 60 kg (132 lbs.).

Description

Hawa Frontslide 60 Matic is an electrically powered hardware system for sliding shutters. Its brushless electric motor, a Hawa Motronic 60 with a high-quality transmission system and drive belt, guarantees a stable, maintenance-free system with a long life. No special connection cables or control box required thanks to controls integrated in the drive unit. Electrical installation therefore corresponds to the usual standard for shutter designs and enables the use of commercially available operating elements.
Hawa Frontslide 60 Matic allows maximum flexibility in façade design: various fixing and covering screen options cover virtually all needs.

Applications

Ideal in building façades designed for privacy and shade, and where space is at a premium, e.g. schools, hotels, public buildings, office premises, low-energy homes, or creative frontage designs in residential settings.

Features of the Hawa Frontslide 60 Matic

- Maximum sliding shutter weight: 60 kg (132 lbs.)
- Sliding shutter thickness: 28–45 mm ($1\frac{1}{8}$"–$1\frac{25}{32}$")
- Minimum sliding shutter width: 600 mm ($1'11\frac{5}{8}$")
- Maximum sliding shutter hight: 3200 mm (10'6")
- Maximum sliding shutter surface: 6.24 m^2 (67.167 ft^2)
- Maximum installation width: 7500 mm ($24'7\frac{9}{32}$")
- Fibreglass-reinforced toothed belts guarantee high tensile strength and a low level of expansion
- High operating safety of the drive unit in outdoor areas thanks to splash water resistance
- The sliding shutters can be moved into any position for privacy or shade, etc.
- Shutters can be removed without loosening the toothed belt
- Straightforward wall or ceiling installation
- For wood, metal or aluminium sliding shutters
- Clip-on covers for attachment to inside and/or outside of track
- Different design options of bottom guides
- Drive unit: CE tested, technical details: → page 23
- Class 4 corrosion resistance in accordance with EN 1670 (extremely high resistance)

Ceiling or window lintel fitting

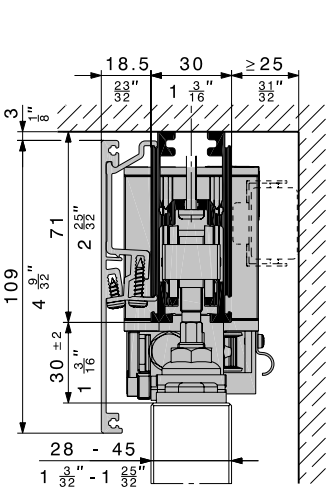

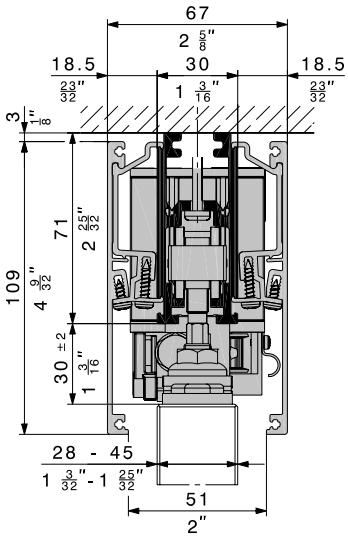

Wall fitting

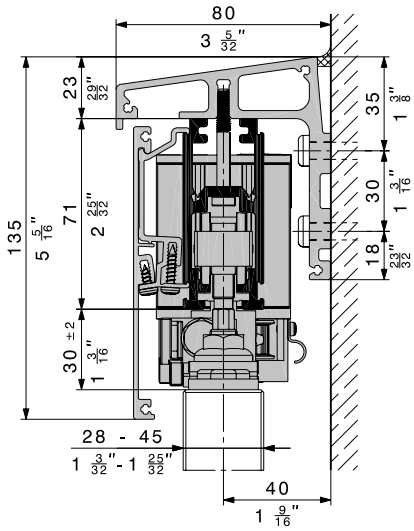

Subject to modification. Metric specifications are exact. Inches are approximate.

Drive unit Hawa Motronic 60

Hawa Motronic 60 is a drive unit with integrated control for automating sliding hardware with a speed of 100 mm (3 5/16")/s and a maximum drive force of 100 N. Drive commands are triggered by applying a current to the control wires.
The Hawa Motronic 60 drive automatically detects the end position of the sliding shutter during the teach-in process. The drive stops and reverses (2x) when it encounters an obstacle.

Start-up box

Start-up box Art. No. 23789 is recommended for start-up.

Hawa Motronic 60, set for sliding shutter drive

	code
Hawa Motronic 60 for Hawa Frontslide 60 Matic, incl. control unit, toothed belt lock and pulley wheel	25146

Set comprising

		piece	code
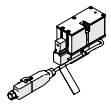	Hawa Motronic 60 with integrated control and connecting cable with a premounted Hirschmann plug	1	25061
	Pulley wheel for automatic mechanism	1	24792
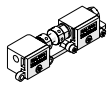	Toothed belt lock	1	19654
	End stop alu	2	24786

Supplementary part for start-up

	code
Start-up box	23789

Toothed belt

Fibreglass-reinforced toothed belts guarantee high tensile strength and a low level of expansion and high impact load resistance when subjected to heavy flexing.

Toothed belt

		length	code
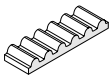	Toothed belt, black, fibre glass reinforced	2.7 m (8'10 5/16")	20208
		5 m (16'4 27/32")	19667
		8 m (26'2 31/32")	19682
		10 m (32'9 23/32")	19668
		15 m (49'2 9/16")	20370
		50 m (164' 1/2")	19669

Calculation for length of toothed belt:
Hawa Frontslide 60 Matic: 2 x installation width (The toothed belt lock is included with the Hawa Motronic set 25146)

Technical details Hawa Motronic 60

- The control is integrated in the drive unit
- Power supply: 100–240 VAC, 50/60 Hz, 30 W
- Max. pre-fuse: 16 A
- Overvoltage category: II
- Protection class: I ⏚
- Operational temperature range: -20 °C bis + 60 °C
- Degree of siuling: 1
- Degree of protection: IP 54
- Max. speed: 100 mm (3 5/16")/s
- Max. drive force: 100 N (protected internally against overload)
- Drive unit: CE tested
- Switch elements: provided by customer
- Mains electrical isolation: provided by customer

Type label

Every drive unit carries a type lable.

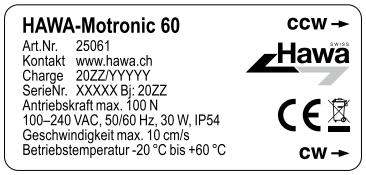

Control and operation of the system

The systems are operated with commercially available electrical switches.

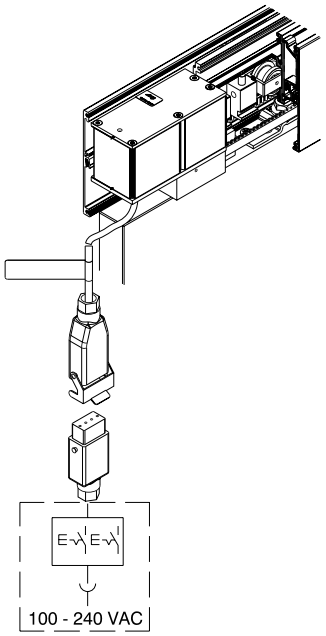

provided by customer

Subject to modification. Metric specifications are exact. Inches are approximate.

Set without top tracks and bottom guide channels

	code
Hawa Frontslide 60 Matic, partial set for 1 sliding shutter	25132

Set comprising

		pieces	code
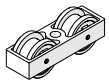	Two-wheeled trolley, M8, with plastic wheels	2	17119
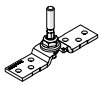	Top fixing plate, stainless steel, with hanger bolt M8	2	24562

Hawa Frontslide 60 Matic

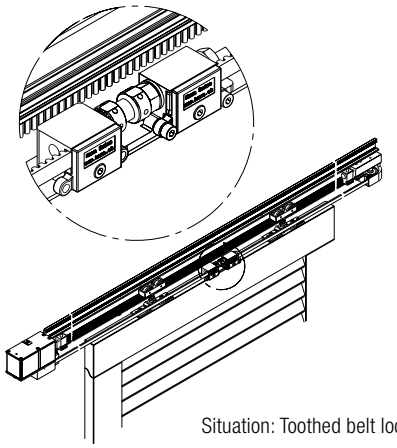

Situation: Toothed belt lock

Calculation for sliding shutter width

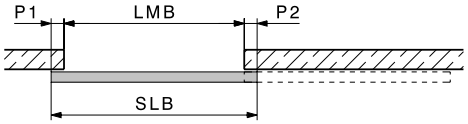

SLB = LMB + P1 + P2

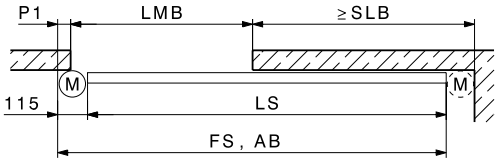

LS = (2 x SLB) – P2 – 155 mm (6 $\frac{1}{8}$")
FS = LS + 155 mm (6 $\frac{1}{8}$")

AB	Installation width
LMB	Entire opening width
FS	Bottom guide channel
SLB	Sliding shutter width
P	Sliding shutter overlap
LS	Top track

Calculation for suspension points

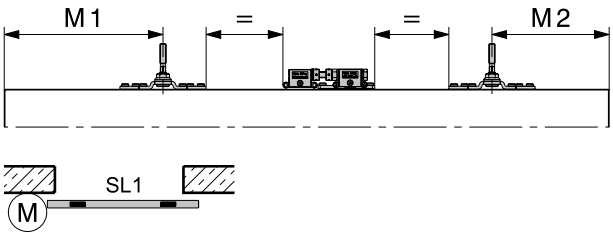

60 A	M1	M2
SL1	210 mm (8 $\frac{9}{32}$")	155 mm (6 $\frac{1}{8}$")

Order specifications

- Number of sets Hawa Motronic 60
- Number of partial sets Hawa Frontslide 60 Matic
- Number and length of toothed belt
- Number and length of top tracks
- For wall fittings:
  – Number, length and type of angled profile support
  – Number of special fixing screw sets
- Number, length and type of covering screens
- Number of fitting parts to covering screens
- Number and type of guides

Optional order specifications

- Number, length and type of spacer profiles for angled profile support
- Number and type of front cover plates
- Number of connecting bolt sets to profiles and covering screens

Top tracks, covering screens and brackets

Top tracks and covering screens: → pages 36–37

Bottom guides

Bottom guides: → pages 42–43

Planning/installation

For planning and installation purposes, please use the installation drawing code 24991. (→ www.hawa.com → Hawa Productfinder)

Special regulations apply to automated installations; please refer to operating instructions code 24675.
(→ www.hawa.com → Hawa Productfinder)

Subject to modification. Metric specifications are exact. Inches are approximate.

Notes

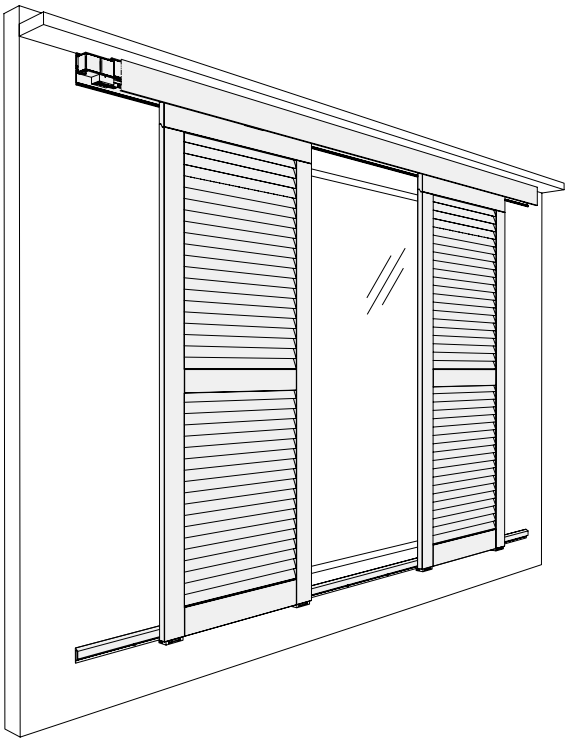

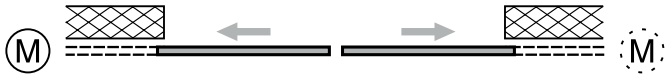

Hawa Frontslide 60 Matic Symmetric 2

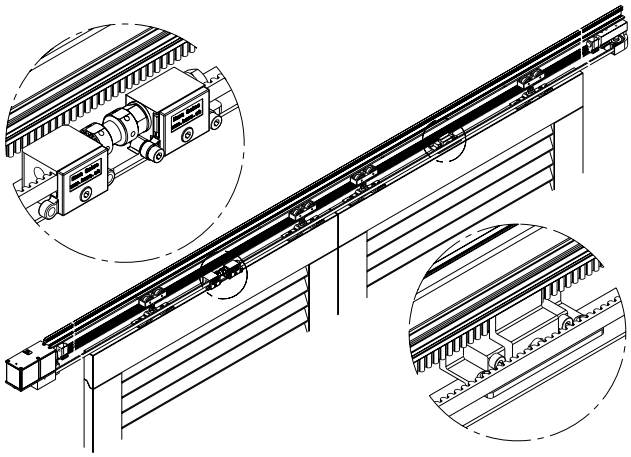

Situation: Toothed belt lock and driver

Sliding shutters – moved automatically and symmetrically.

Hardware system for 2 wood, metal or aluminium automatic sliding shutters with a panel weight up to 60 kg (132 lbs.), opening simultaneously left and right.

Description

Hawa Frontslide 60 Matic Symmetric 2 is an electrically powered hardware system for sliding shutters. 2 sliding shutters can be moved simultaneously with just one drive unit and one driver. Its brushless electric motor, a Hawa Motronic 60 with a high-quality transmission system and drive belt, guarantees a stable, maintenance- free system with a long life. No special connection cables or control box required thanks to controls integrated in the drive unit. Electrical installation therefore corresponds to the usual standard for shutter designs and enables the use of commercially available operating elements Hawa Frontslide 60 Matic Symmetric 2 allows maximum flexibility in façade design: various fixing and covering screen options cover virtually all needs.

Applications

Ideal in building façades designed for privacy and shade, and where space is at a premium, e.g. schools, hotels, public buildings, office premises, low-energy homes, or creative frontage designs in residential settings.

Features of the Hawa Frontslide 60 Matic Symmetric 2

- Maximum sliding shutter weight: 60 kg (132 lbs.)/shutter
- Sliding shutter thickness: 28–45 mm ($1\frac{1}{8}$"–$1\frac{25}{32}$")
- Minimum sliding shutter width: 550 mm ($1'9\frac{21}{32}$")
- Maximum sliding shutter hight: 3200 mm (10'6")
- Maximum sliding shutter surface: 6.24 m^2 (67.1668 ft^2)
- Maximum installation width: 7500 mm ($24'7\frac{9}{32}$")
- Fibreglass-reinforced toothed belts guarantee high tensile strength and a low level of expansion
- High operating safety of the drive unit in outdoor areas thanks to splash water resistance
- Sliding shutters can be brought into any position
- Shutters can be removed without loosening the toothed belt
- Straightforward wall or ceiling installation
- For wood, metal or aluminium sliding shutters
- Clip-on covers for attachment to inside and/or outside of track
- Different design options of bottom guides
- Drive unit: CE tested, technical details: → page 23
- Class 4 corrosion resistance in accordance with EN 1670 (extremely high resistance)

Subject to modification. Metric specifications are exact. Inches are approximate.

Set without top tracks and bottom guide channels

	code
Hawa Frontslide 60 Matic Symmetric 2, partial set for 2 sliding shutters	25133

Set comprising

		pieces	code
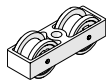	Two-wheeled trolley, M8, with plastic wheels	4	17119
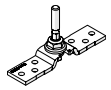	Top fixing plate, stainless steel, with hanger bolt M8	4	24562
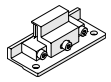	Driver for Symmetric installations	1	19655

Hawa Motronic 60, set for sliding shutter drive

	code
Hawa Motronic 60 for Hawa Frontslide 60 Matic, incl. control unit, toothed belt lock and pulley wheel	25146

Toothed belt

		length	code
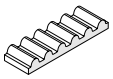	Toothed belt, black, fibre glass reinforced	5 m (16'4 $\frac{27}{32}$")	19667
		8 m (26'2 $\frac{31}{32}$")	19682
		10 m (32'9 $\frac{23}{32}$")	19668
		15 m (49'2 $\frac{9}{16}$")	20370
		50 m (164' $\frac{1}{2}$")	19669

Calculation for length of toothed belt:
Hawa Frontslide 60 Matic: 2 x installation width (The toothed belt lock is included with the Hawa Motronic set 25146)

Calculation for sliding shutter width

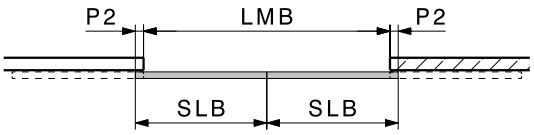

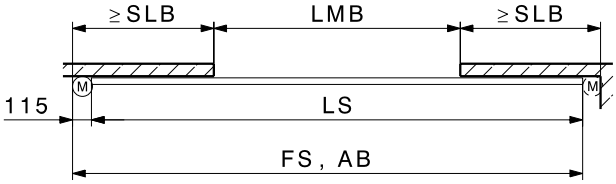

$$SLB = \frac{LMB}{2} + P2$$

$$LS = LMB + (2 \times SLB) - 115$$

$$FS = LS + 155 \text{ mm } (6\tfrac{1}{8}")$$

AB	Installation width
LMB	Entire opening width
FS	Bottom guide channel
SLB	Sliding shutter width
M	Minimum space for drive unit
P	Sliding shutter overlap
LS	Top track

Calculation for suspension points

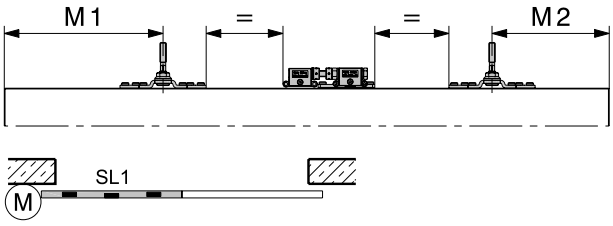

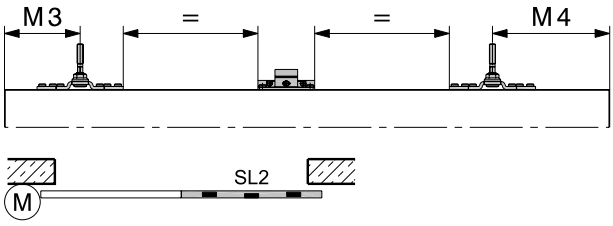

60 Matic	M1	M2
SL1	210 mm (8 $\frac{9}{32}$")	100 mm (3 $\frac{15}{16}$")

60 Matic	M3	M4
SL2	100 mm (3 $\frac{15}{16}$")	155 mm (6 $\frac{1}{8}$")

Order specifications

- Number of sets Hawa Motronic 60
- Number of partial sets Hawa Frontslide 60 Matic Symmetric 2
- Number and length of toothed belt
- Number and length of top tracks
- For wall fittings:
  – Number, length and type of angled profile support
  – Number of special fixing screw sets
- Number, length and type of covering screens
- Number of fitting parts to covering screens
- Number and type of guides

Optional order specifications

- Number, length and type of spacer profiles for angled profile support
- Number and type of front cover plates
- Number of connecting bolt sets to profiles and covering screens

Top tracks, covering screens and brackets

Top tracks and covering screens: → pages 36–37

Bottom guides

Bottom guides: → pages 42–43

Planning/installation

For planning and installation purposes, please use the installation drawing code 24992. (→ www.hawa.com → Hawa Productfinder)

Special regulations apply to automated installations; please refer to operating instructions code 24675.
(→ www.hawa.com → Hawa Productfinder)

Subject to modification. Metric specifications are exact. Inches are approximate.

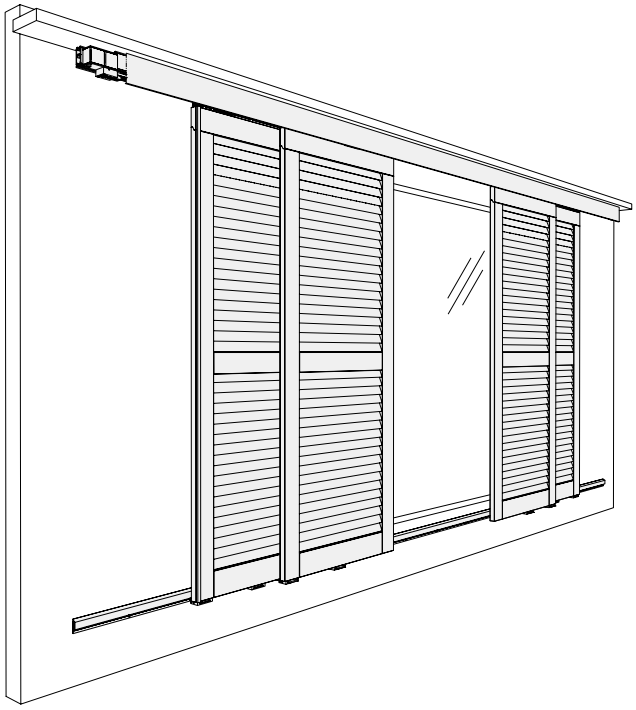

Sliding shutters – moved automatically and symmetrically.

Hardware system for 4 wood, metal or aluminium automatic sliding shutters with a panel weight up to 40 kg (88 lbs.), opening simultaneously left and right.

Description

Hawa Frontslide 60 Matic Symmetric 2+2 is an electrically powered hardware system for sliding shutters. 4 sliding shutters can be moved simultaneously with just one drive unit and one driver. Its brushless electric motor, a Hawa Motronic 60 with a high-quality transmission system and drive belt, guarantees a stable, maintenance- free system with a long life. No special connection cables or control box required thanks to controls integrated in the drive unit. Electrical installation therefore corresponds to the usual standard for shutter designs and enables the use of commercially available operating elements. Hawa Frontslide 60 Matic Symmetric 2+2 allows maximum flexibility in façade design: various fixing and covering screen options cover virtually all needs.

Applications

Ideal in building façades designed for privacy and shade, and where space is at a premium, e.g. schools, hotels, public buildings, office premises, low-energy homes, or creative frontage designs in residential settings.

Features of the Hawa Frontslide 60 Matic Symmetric 2+2

- Maximum sliding shutter weight: 40 kg (88 lbs.)/shutter
- Sliding shutter thickness: 28–40 mm ($1\frac{1}{8}$"–$1\frac{19}{32}$")
- Sliding shutter width: 650–1200 mm (2'$1\frac{19}{32}$"–3'$11\frac{1}{4}$")
- Maximum sliding shutter hight: 3200 mm (10'6")
- Fibreglass-reinforced toothed belts guarantee high tensile strength and a low level of expansion
- High operating safety of the drive unit in outdoor areas thanks to splash water resistance
- Sliding shutters can be brought into any position
- Shutters can be removed without loosening the toothed belt
- Straightforward wall or ceiling installation
- For wood, metal or aluminium sliding shutters
- Clip-on covers for attachment to inside and/or outside of track
- Different design options of bottom guides
- Drive unit: CE tested, technical details: → page 23
- Class 4 corrosion resistance in accordance with EN 1670 (extremely high resistance)

Wall fitting

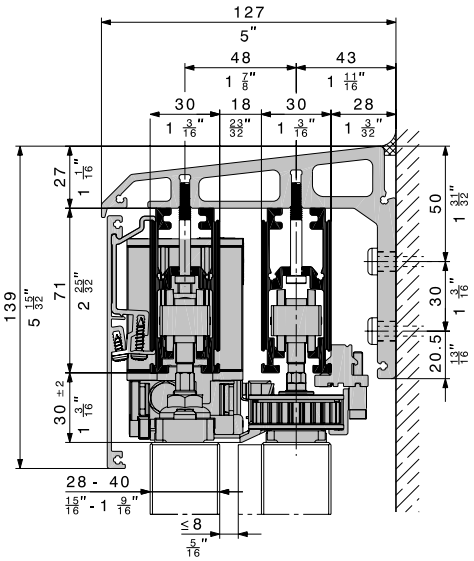

Ceiling or window lintel fitting

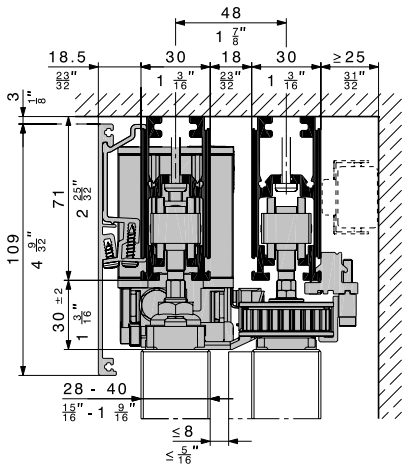

Subject to modification. Metric specifications are exact. Inches are approximate.

Set without top tracks and bottom guide channels

	code
Hawa Frontslide 60 Matic Symmetric 2+2, partial set for 4 sliding shutters	25134

Set comprising

		pieces	code
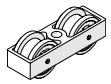	Two-wheeled trolley, M8, with plastic wheels	8	17119
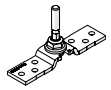	Top fixing plate, stainless steel, with hanger bolt M8	8	24562
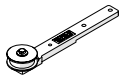	Guide pulley wheel, with fixing plate, long	1	20139
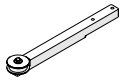	Guide pulley wheel, with fixing plate, extra long for Hawa Frontslide 60–140 Matic Symmetric 2+2	1	25314
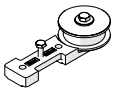	Guide pulley wheel, with fixing plate, short	2	20140
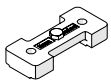	Driver counter-plate, wide	2	20246
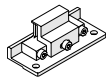	Driver for Symmetric installations	1	19655
	Driver, wide	2	20141
	Toothed belt clamp for manual and automatic systems	2	24777
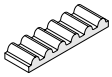	Toothed belt, black, 2,7 m (8'10 5/16"), fibreglass reinforced	1	20208
	Toothed belt, black, 5 m (16'4 27/32"), fibreglass reinforced	1	19667

Hawa Motronic 60, set for sliding shutter drive

	code
Hawa Motronic 60 for Hawa Frontslide 60 Matic, incl. control unit, toothed belt lock and pulley wheel	25146

Toothed belt

		length	code
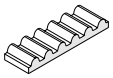	Toothed belt, black, fibre glass reinforced	2.7 m (8'10 5/16")	20208
		5 m (16'4 27/32")	19667
		8 m (26'2 31/32")	19682
		10 m (32'9 23/32")	19668
		15 m (49'2 9/16")	20370
		50 m (164'1/2")	19669

Calculation for length of toothed belt:
Toothed belt length, outer sliding level: 2 x installation width
(The toothed belt lock is included with the Hawa Motronic set 25146)

Hawa Frontslide 60 Matic Symmetric 2+2

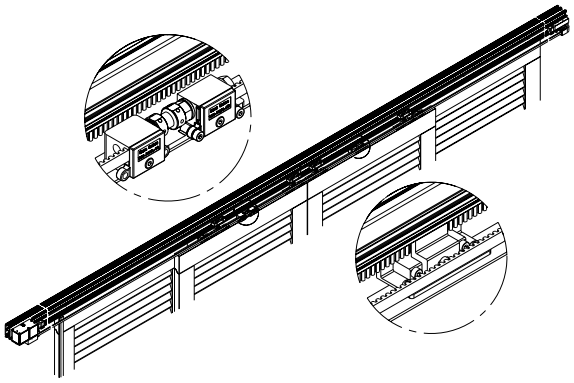

Situation: Toothed belt lock and driver

Subject to modification. Metric specifications are exact. Inches are approximate.

Calculation for suspension points

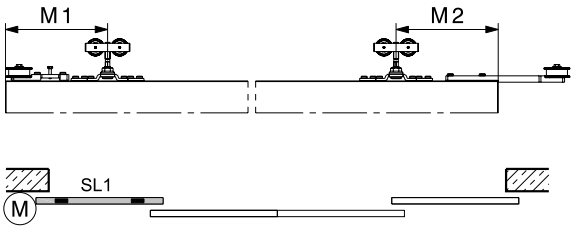

60 Matic	M1	M2
SL1	160 mm (6 5/16")	160 mm (6 5/16")

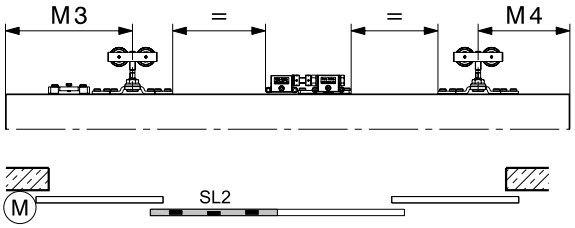

60 Matic	M3	M4
SL2	260 mm (10 1/4")	100 mm (3 15/16")

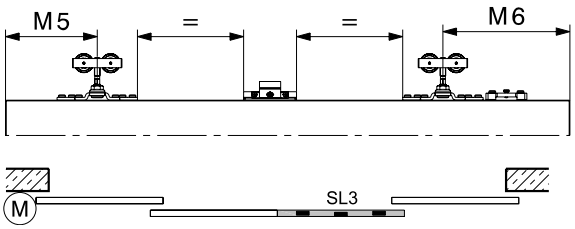

60 Matic	M5	M6
SL3	100 mm (3 15/16")	180 mm (7 3/32")

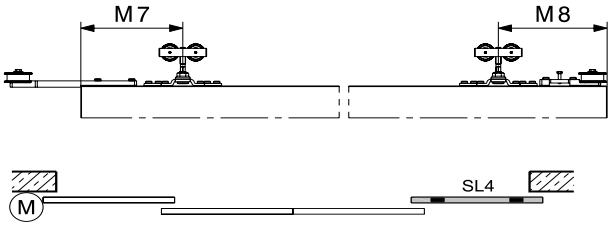

60 Matic	M7	M8
SL4	160 mm (6 5/16")	160 mm (6 5/16")

Calculation for sliding shutter width

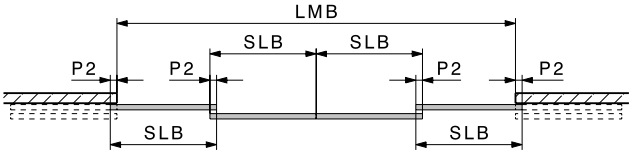

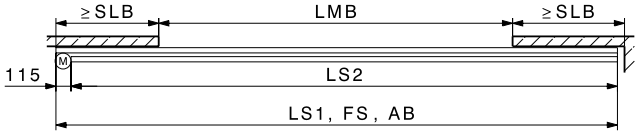

$$SLB = \frac{LMB}{4} + P2$$

$P2 \geq 50$ mm (1 31/32")

LS1 = LMB + (2 x SLB)
LS2 = LS1 – 155 mm (6 1/8")

AB	Installation width
LMB	Entire opening width
SLB	Sliding shutter width
M	Minimum space for drive unit
P	Sliding shutter overlap
FS	Bottom guide channel
LS1	Inner top track
LS2	Outer top track

Top tracks, covering screens and brackets

Top tracks and covering screens: → pages 36–37

Bottom guides

Bottom guides: → pages 42–43

Order specifications

- Number of sets Hawa Motronic 60
- Number of partial sets Hawa Frontslide 60 Matic Symmetric 2+2
- Number and length of toothed belt
- Number and length of top tracks
- For wall fittings:
  – Number, length and type of angled profile support
  – Number of special fixing screw sets
- Number, length and type of covering screens
- Number of fitting parts to covering screens
- Number and type of guides

Optional order specifications

- Number and type of front cover plates
- Number of connecting bolt sets to profiles and covering screens

Planning/installation

For planning and installation purposes, please use the installation drawing code 24993. (→ www.hawa.com → Hawa Productfinder)

Special regulations apply to automated installations; please refer to operating instructions code 24675.
(→ www.hawa.com → Hawa Productfinder)

Subject to modification. Metric specifications are exact. Inches are approximate.

Notes

Sliding shutters – automation in motion.

Hardware for simultaneously automatic sliding up to 4 wood, metal or aluminium sliding shutters up to 60 kg (132 lbs.).

Description

The Hawa Frontslide 60 Matic Telescopic can automatically move up to 4 sliding shutters simultaneously when combined with Hawa Frontslide 60 Matic drive components.
Its brushless electric motor, a Hawa Motronic 60 with a high-quality transmission system and drive belt, guarantees a stable, maintenance-free system with a long life. No special connection cables or control box are required as the controls are integrated in the drive unit. Electrical installation therefore corresponds to the usual standard for shutter designs and enables the use of commercially available operating elements.
An angled profile support is available for mounting two-panelled Hawa Telescopic systems to the wall. In this case, the top track is fastened to the angled profile support using special mounting screws from Hawa.
The Hawa Frontslide 60 Matic Telescopic allows maximum flexibility in façade design. Aluminium covering screens in either natural anodized or plain finishes ready for custom painting provide aesthetic appeal and are easily clipped on to the inside and/or outside of the top track. Top track and drive units are covered with one aluminium covering screen only.

Applications

Ideal for façades with a high proportion of glass, wherever screening and shade form part of the façade design, and where space is at a premium, e.g. schools, hotels, public buildings, office and administration premises, apartment buildings, low-energy houses, etc.

Features of the Hawa Frontslide 60 Matic Telescopic

- Max. sliding shutter weight with 2 shutters: 60 kg (132 lbs.)/shutter
- Max. sliding shutter weight with 3 shutters: 60 kg (132 lbs.)/shutter
- Max. sliding shutter weight with 4 shutters: 60 kg (132 lbs.)/shutter
- Sliding shutter thickness: 28–40 mm ($1\frac{1}{8}$"–$1\frac{19}{32}$")
- Sliding shutter width: 650–1200 mm (2'$1\frac{19}{32}$"–3'$11\frac{1}{4}$")
- Maximum sliding shutter hight: 3200 mm (10'6")
- Corrosion-resistant materials
- Fibreglass-reinforced toothed belts guarantee high tensile strength and a low level of expansion
- Sliding shutters can be brought into any position
- Fast and efficient assembly from below and from the façade side
- Shutters can be removed without loosening the toothed belt
- Clip-on covers for attachment to inside and/or outside of track
- Different design options of bottom guides
- Drive unit: CE tested, technical details: → page 23
- Class 4 corrosion resistance in accordance with EN 1670 (extremely high resistance)

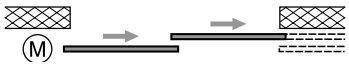

Hawa Frontslide 60 Matic Telescopic

Hawa Frontslide 60 Matic Telescopic 3

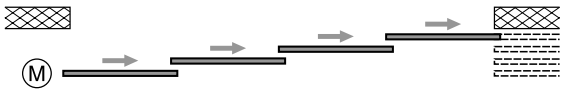

Hawa Frontslide 60 Matic Telescopic 4

For dimensioning reasons the drive unit Ⓜ must be positioned opposite the stacking space.

Subject to modification. Metric specifications are exact. Inches are approximate.

Sets without top tracks and bottom guide channels

	code
Hawa Frontslide 60 Matic Telescopic, set for 2 sliding shutters, 650–1200 mm (2'1 19/32"–3'11 1/4")	25135
Hawa Frontslide 60 Matic Telescopic 3, set for 3 sliding shutters, 650–1200 mm (2'1 19/32"–3'11 1/4")	25136
Hawa Frontslide 60 Matic Telescopic 4, set for 4 sliding shutters, 650–1200 mm (2'1 19/32"–3'11 1/4")	25137

Set comprising

		25135	25136	25137	code
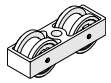	Two-wheeled trolley, M8, with plastic wheels	4	6	8	17119
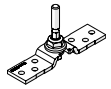	Top fixing plate, stainless steel, with hanger bolt M8	4	6	8	24562
	Toothed belt clamp for manual and automatic systems	1	1	1	24777
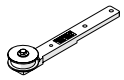	Guide pulley wheel, with fixing plate, long	1	2	3	20139
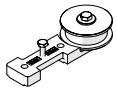	Guide pulley wheel, with fixing plate, short	1	2	3	20140
	Driver, wide	1	2	3	20141
	Driver, narrow	–	1	2	20142
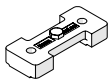	Driver counter-plate, wide	1	1	1	20246
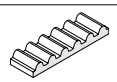	Toothed belt, black, 2,7 m (8'10 5/16"), fibreglass reinforced	1	2	3	20208

Hawa Motronic 60, set for sliding shutter drive

	code
Hawa Motronic 60 for Hawa Frontslide 60 Matic, incl. control unit, toothed belt lock and pulley wheel	25146

Toothed belt

		length	code
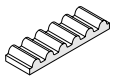	Toothed belt, black, fibre glass reinforced	2.7 m (8'10 5/16")	20208
		5 m (16'4 27/32")	19667
		8 m (26'2 31/32")	19682
		10 m (32'9 23/32")	19668
		15 m (49'2 9/16")	20370
		50 m (164'1/2")	19669

Calculation for length of toothed belt:
Hawa Frontslide 60 Matic: 2 x installation width (The toothed belt lock is included with the Hawa Motronic set 25146)

Two sliding shutters of up to 60 kg max. per panel

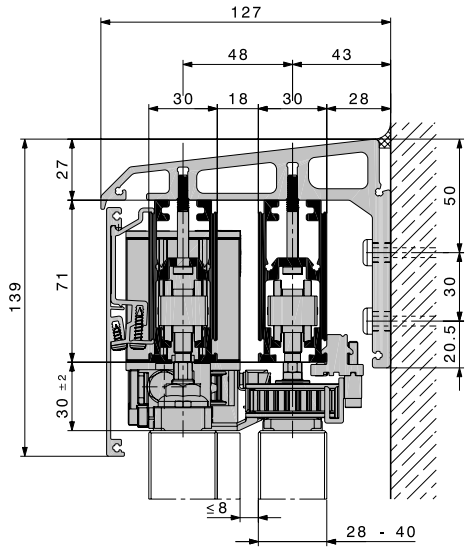

Three sliding shutters of up to 50 kg max. per panel

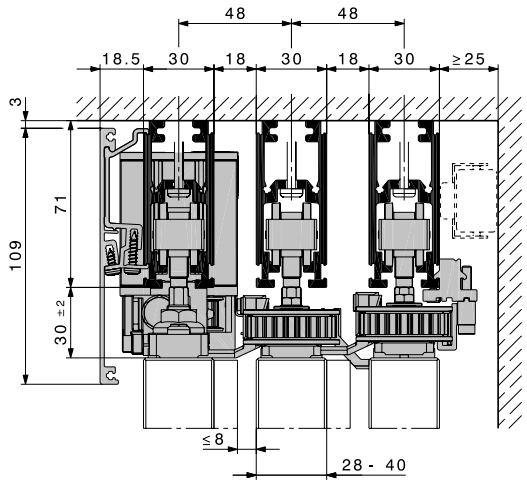

Four sliding shutters of up to 40 kg max. per panel

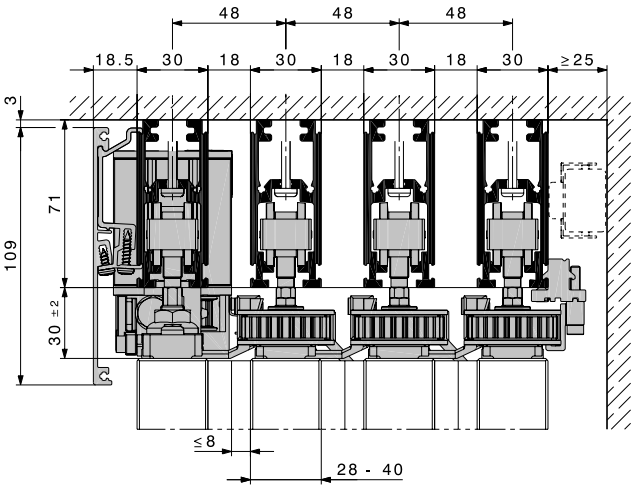

Subject to modification. Metric specifications are exact. Inches are approximate.

Calculation for sliding shutter width

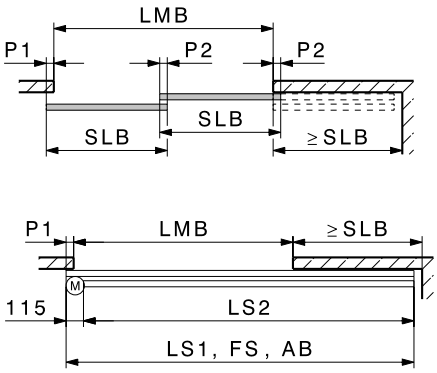

Hawa Frontslide 60 Matic Telescopic 2

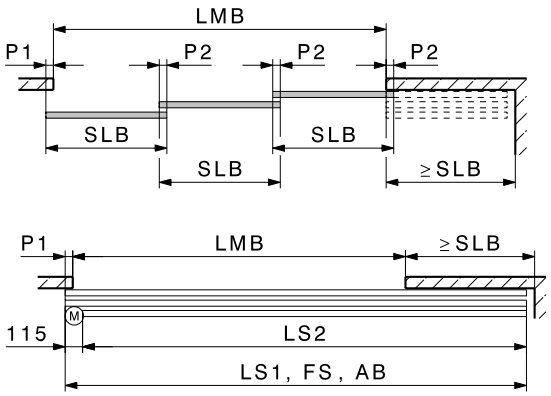

Hawa Frontslide 60 Matic Telescopic 3

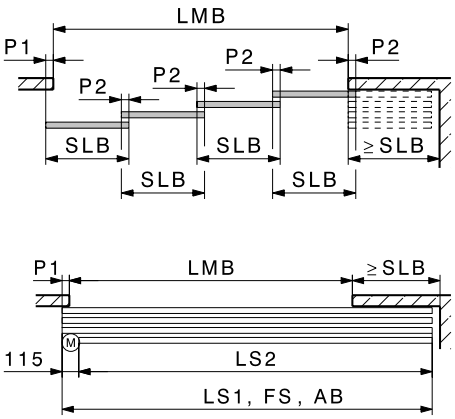

Hawa Frontslide 60 Matic Telescopic 4

$$SLB = \frac{LMB + P1}{AL} + P2$$

$P2 \geq 50$ mm ($1\frac{31}{32}$")

$LS1 = LMB + P1 + SLB$

$LS2 = LS1 - 155$ mm ($6\frac{1}{8}$")

AB	Installation width
LMB	Entire opening width
AL	Nomber of sliding shutters
FS	Bottom guide channel
SLB	Sliding shutter width
P	Sliding shutter overlap
LS1	Inner top track
LS2	Outer top track

Calculation for suspension points

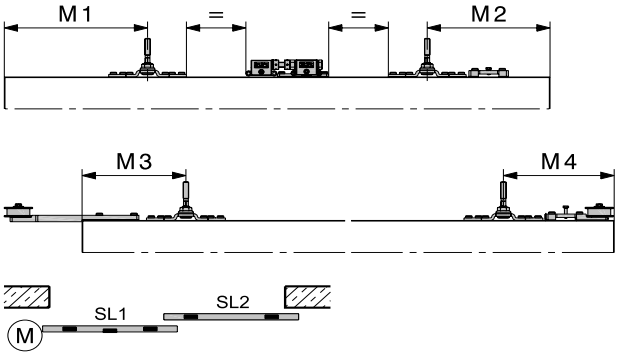

Hawa Frontslide 60 Matic Telescopic 2

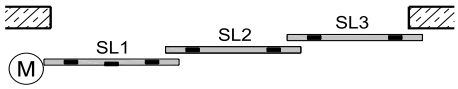

Hawa Frontslide 60 Matic Telescopic 3

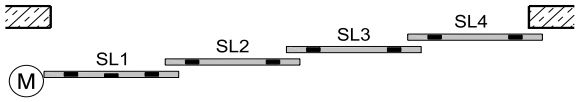

Hawa Frontslide 60 Matic Telescopic 4

60 Matic	M1	M2	M3	M4
SL1	210 mm ($8\frac{9}{32}$")	180 mm ($7\frac{3}{32}$")		
SL2, 3, 4			160 mm ($6\frac{5}{16}$")	160 mm ($6\frac{5}{16}$")

Top tracks, covering screens and brackets

Top tracks and covering screens: → pages 36–37

Bottom guides

Bottom guides: → pages 42–43

Order specifications

- Number of sets Hawa Motronic 60
- Number and type of sets Hawa Frontslide 60 Matic Telescopic
- Number and length of toothed belt
- Number and length of top tracks
- For wall fittings:
  – Number, length and type of angled profile support
  – Number of special fixing screw sets
- Number, length and type of covering screens
- Number of fitting parts to covering screens
- Number and type of guides

Optional order specifications

- Number of connecting bolt sets to profiles and covering screens
- Number and type of front cover plates

Planning/installation

For planning and installation purposes, please use the installation drawings:

- Hawa Frontslide 60 Matic Telescopic 2 Nr. 24994
- Hawa Frontslide 60 Matic Telescopic 3 Nr. 24995
- Hawa Frontslide 60 Matic Telescopic 4 Nr. 24996

Special regulations apply to automated installations; please refer to operating instructions code 24675.
(→ www.hawa.com → Hawa Productfinder)

Subject to modification. Metric specifications are exact. Inches are approximate.

Notes

Lower top track

Caution: Hole positions vary.		mm/inch	code
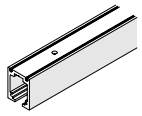	Lowor top track, alu plain anodized, predrilled	2500 (8'2 7/16")	24842
		6000 (19'8 7/32")	24802
		cut to size	24803
	Connecting bolts, set of 6 pieces		17221
Can only be used for manual systems Hawa Frontslide 60 A and B.			

Lower top track and Hawa Frontslide 60 B

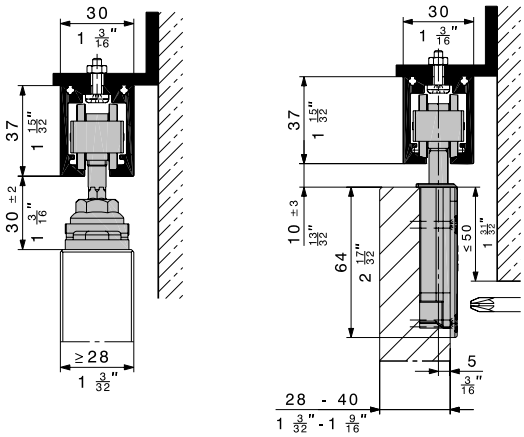

Top tracks for installations with or without covering screens

Caution: Hole positions vary.		mm/inch	code
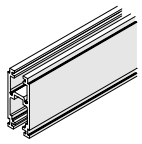	Top track, alu plain anodized, predrilled	3500 (11'5 13/16")	24839
		6000 (19'8 7/32")	24795
		cut to size	24796
	Connecting bolts, set of 6 pieces		17221

Angled profile support

Caution: Hole positions vary		mm/inch	code
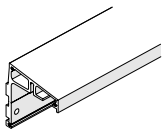	Angled profile support for one sliding level, alu plain anodized, predrilled	6000 (19'8 7/32")	21378
		cut to size	21379
	Angled profile support for one sliding level, alu unanodized, predrilled	6000 (19'8 7/32")	21380
		cut to size	21381
	Special fixing screws for securing top track to angled profile support, set of 10 pieces (3 pieces per meter)		19774
	Connecting bolts, set of 6 pieces		17221
Special screws (code 19774) must be used for best results when fixing the track to the angled profile support.			

Ceiling or window lintel fitting

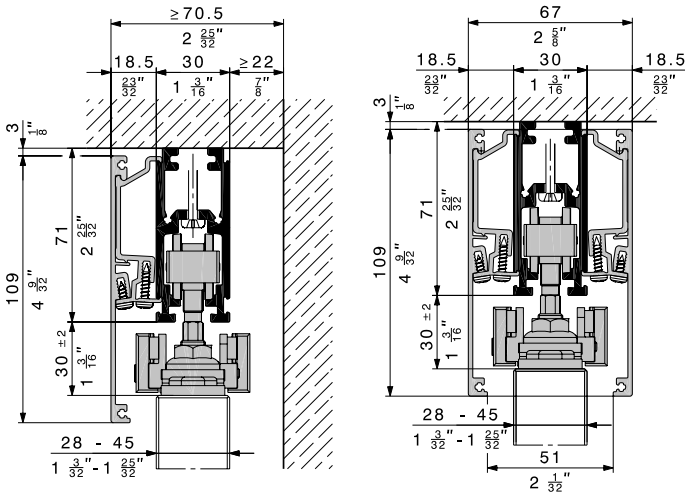

Angled profile support

Caution: Hole positions vary		mm/inch	code
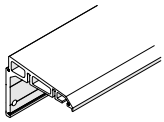	Angled profile support for two sliding levels, alu plain anodized, predrilled	6000 (19'8 7/32")	21384
		cut to size	21385
	Angled profile support for two sliding levels, alu unanodized, predrilled	6000 (19'8 7/32")	21386
		cut to size	21387
	Special fixing screws for securing top track to angled profile support, set of 10 pieces (3 pieces per meter)		19774
	Connecting bolts, set of 6 pieces		17221
Special screws (code 19774) must be used for best results when fixing the track to the angled profile support.			

Wall fitting

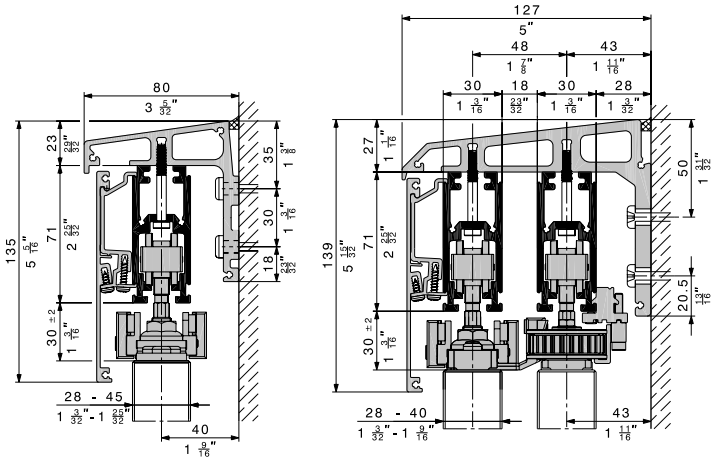

Subject to modification. Metric specifications are exact. Inches are approximate.

Spacer profile for angled profile support for one sliding level

		mm/inch	code
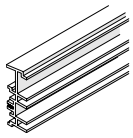	Spacer profile for angled profile support for one sliding level, alu plain anodized	6000 (19'8 7/32")	19724
		cut to size	19727

Covering screens

		aluminium	code
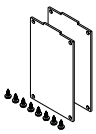	Front cover plates for Hawa Frontslide 60, for ceiling fitting, 1 pair	plain anodized	24573
		unanodized	24575
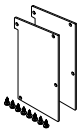	Front cover plates, for wall fitting without spacer profile, 1 pair	plain anodized	24577
		unanodized	24580
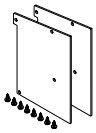	Front cover plates, for wall fitting with one spacer profile, 1 pair	plain anodized	24583
		unanodized	24586
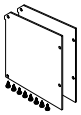	Front cover plates, for wall fitting with two spacer profiles, 1 pair	plain anodized	24821
		unanodized	24824

Covering screens

		mm/inch	code
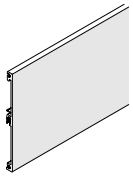	Covering screens, alu plain anodized	3500 (11'5 13/16")	24845
		6000 (19'8 7/32")	24808
		cut to size	24809
	Covering screens, alu unanodized	6000 (19'8 7/32")	24810
		cut to size	24811
	Parts for fitting top track cover, set of 5 pieces		24767
	Connecting bolts, set of 6 pieces		17221

Wall fitting with increased clearance (weatherboard)

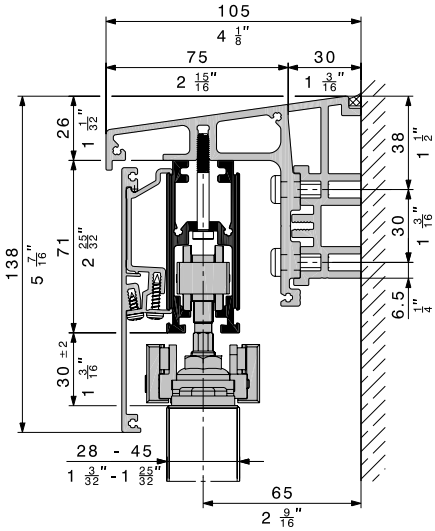

Spacer profile for angled profile support for one sliding level

Fitting the covering screens

Cover fixings (code 24767) are required for attaching the covering screens.

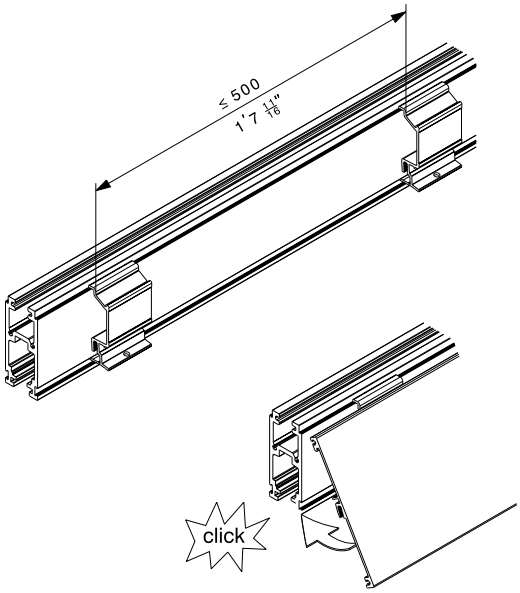

Subject to modification. Metric specifications are exact. Inches are approximate.

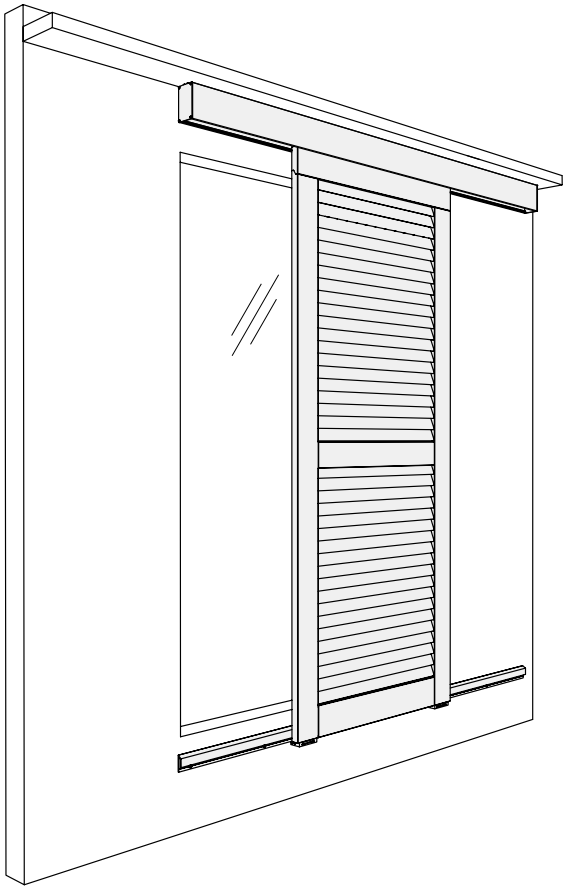

Sliding shutters for a functional façade finish.

Hardware system for wood, metal or aluminium sliding shutters with a panel weight up to 100 kg (220 lbs.)

Description

Hawa Frontslide 100 A is a dependable hardware system for manually operated and motorised sliding shutters, with different fitting options. Attached to the ceiling or window lintel, the top track screws directly to the load-bearing surface. On the aesthetic side, aluminium covering screens in natural anodized or plain finishes for custom painting simply clip-on to the inside or outside edges of the top track. In buildings with an air gap behind the façade, open window shutters can slide out of sight into the void between the building wall and the façade.

Applications

Ideal in building façades designed for privacy and shade, and where space is at a premium, e.g. schools, hotels, public buildings, office premises, low-energy homes, etc.

Typisch Hawa Frontslide 100 A

- Maximum sliding shutter weight: 100 kg (220 lbs.)
- Sliding shutter thickness: 28–50 mm ($1\frac{1}{8}$"–$1\frac{31}{32}$")
- Minimum sliding shutter width: 500 mm ($19\frac{11}{16}$")
- Maximum sliding shutter hight: 3200 mm (10'$6\frac{3}{4}$")
- Class 4 corrosion resistance in accordance with EN 1670 (extremely high resistance)
- Corrosion-resistant materials
- Fast and efficient assembly from below and from the façade side
- Clip-on covers for inside or outside attachment
- The sliding shutters can be moved into any position
- For wood, metal or aluminium sliding shutters
- Different design options of bottom guides
- External tests certify the highest wind resistance (Class 6)

Hawa Frontslide 100 A

Hawa Frontslide 100 A Telescopic 2

Hawa Frontslide 100 A Telescopic 3

Hawa Frontslide 100 A Telescopic 4

Hawa Frontslide 100 A Symmetric

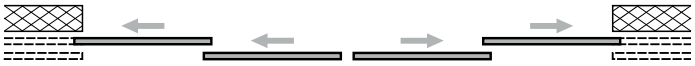

Hawa Frontslide 100 A Symmetric 2+2

Subject to modification. Metric specifications are exact. Inches are approximate.

Lower top track

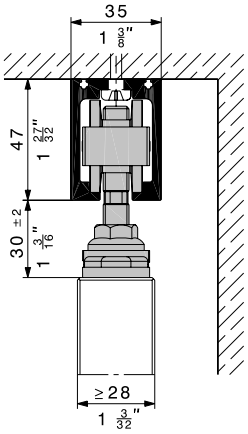

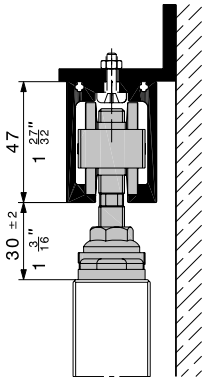

solution provided by customer

Ceiling or window lintel fitting

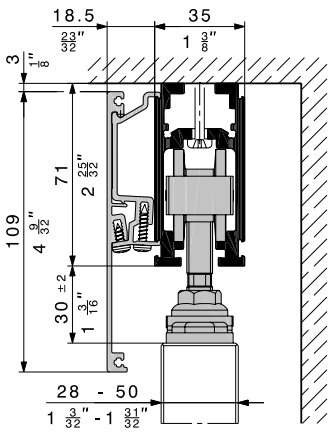

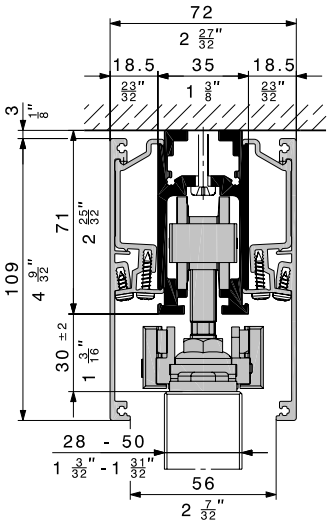

Wall fitting – solution provided by customer

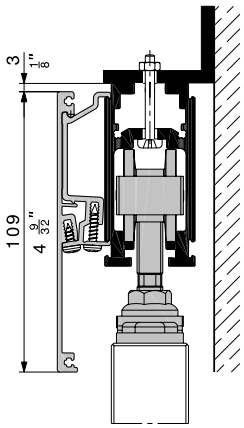

solution provided by customer

Ceiling or window lintel fitting for several sliding levels

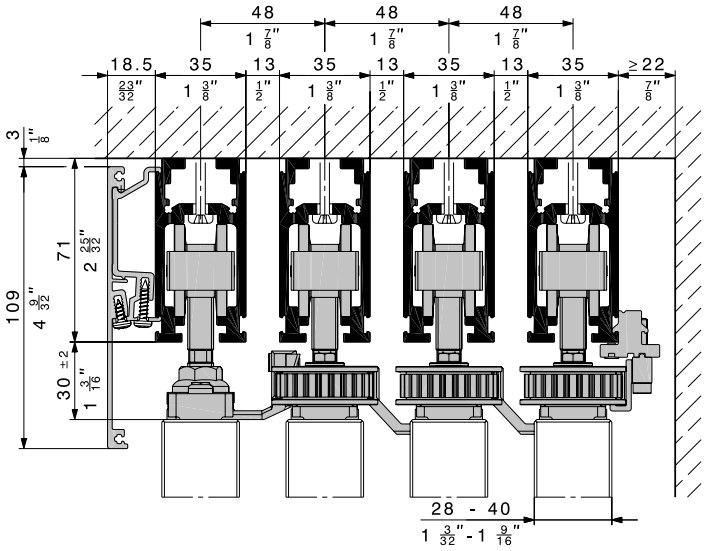

Hawa Frontslide 100 A Telescopic 4

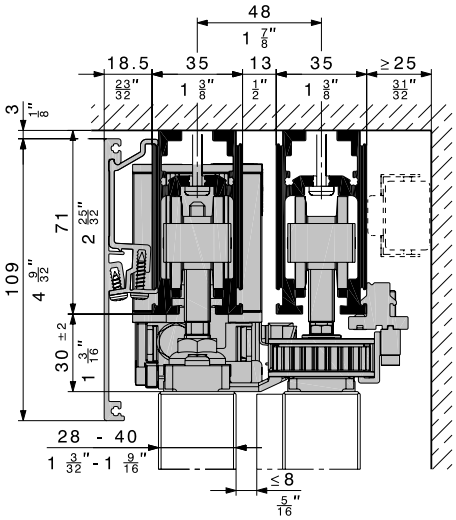

Hawa Frontslide 100 Matic Telescopic 2

Planning/installation

All details of Hawa Frontslide 100 can be found in the
Hawa productfinder (→ www.hawa.com → Hawa Productfinder)
or at www.hawa.com/frontslide

Subject to modification. Metric specifications are exact. Inches are approximate.

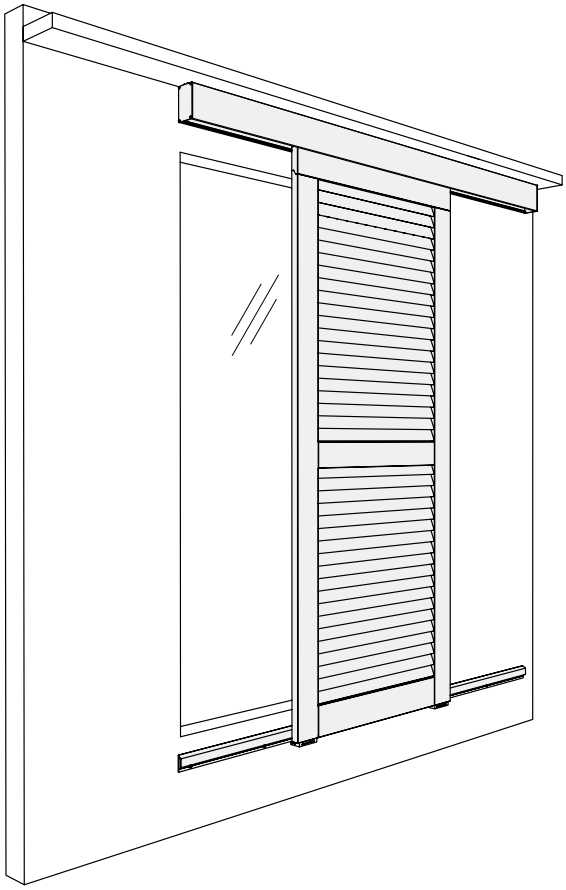

Sliding shutters for a functional façade finish.

Hardware system for wood, metal or aluminium sliding shutters with a panel weight up to 140 kg (308 lbs.)

Description

Hawa Frontslide 140 A is a dependable hardware system for manually operated and motorised sliding shutters, with different fitting options. Attached to the ceiling or window lintel, the top track screws directly to the load-bearing surface. On the aesthetic side, aluminium covering screens in natural anodized or plain finishes for custom painting simply clip-on to the inside or outside edges of the top track. In buildings with an air gap behind the façade, open window shutters can slide out of sight into the void between the building wall and the façade.

Applications

Ideal in building façades designed for privacy and shade, and where space is at a premium, e.g. schools, hotels, public buildings, office premises, low-energy homes, etc.

Features of the Hawa Frontslide 140 A

- Maximum sliding shutter weight: 140 kg (308 lbs.)
- Sliding shutter thickness: 28–60 mm ($1\frac{1}{8}$"–$2\frac{3}{4}$")
- Minimum sliding shutter width: 700 mm ($2'3\frac{9}{16}$")
- Maximum sliding shutter hight: 3200 mm ($10'6\frac{3}{4}$")
- Class 4 corrosion resistance in accordance with EN 1670 (extremely high resistance)
- Fast and efficient assembly from below and from the façade side
- Clip-on covers for inside or outside attachment
- The sliding shutters can be moved into any position
- For wood, metal or aluminium sliding shutters
- Different design options of bottom guides
- External tests certify the highest wind resistance (Class 6 in accordance with EN 13659)

Hawa Frontslide 140 A

Hawa Frontslide 140 A Telescopic 2

Hawa Frontslide 140 A Symmetric

Subject to modification. Metric specifications are exact. Inches are approximate.

Ceiling or window lintel fitting

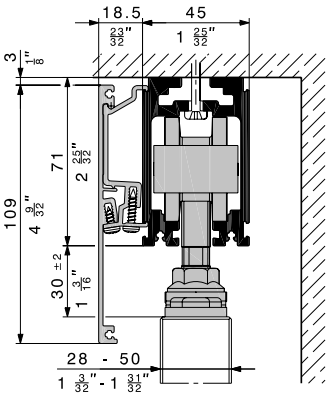

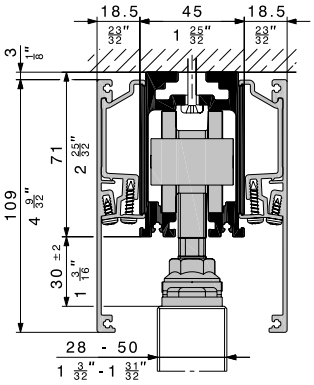

Wall fitting – solution provided by customer

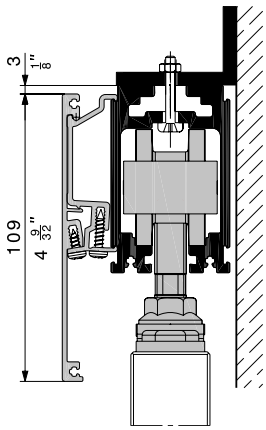

solution provided by customer

Ceiling or window lintel fitting for several sliding levels

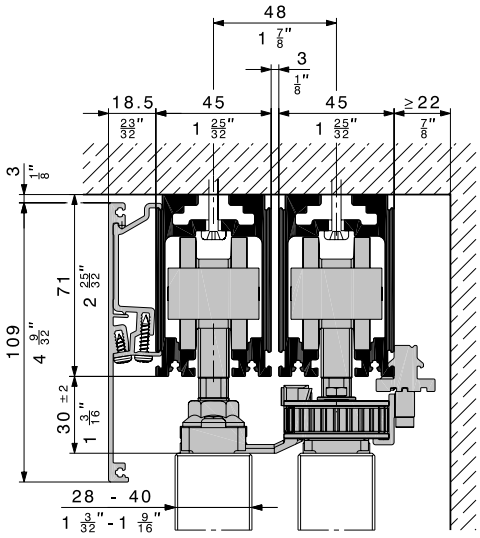

Hawa Frontslide 140 A Telescopic 2

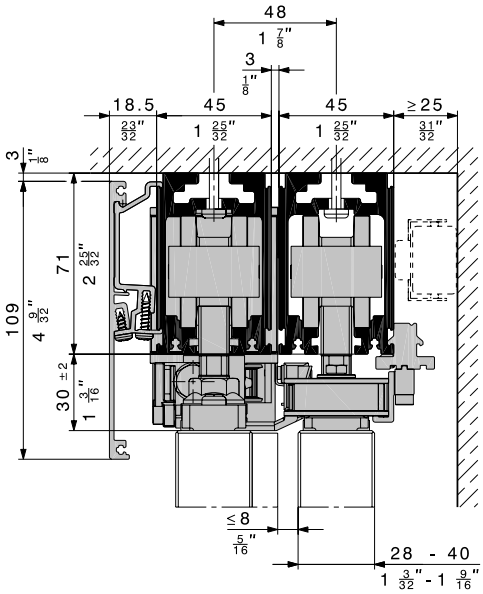

Hawa Frontslide 140 Matic Telescopic 2

Planning/installation

All details of Hawa Frontslide 140 can be found in the
Hawa productfinder (→ www.hawa.com → Hawa Productfinder)
or at www.hawa.com/frontslide

Subject to modification. Metric specifications are exact. Inches are approximate.

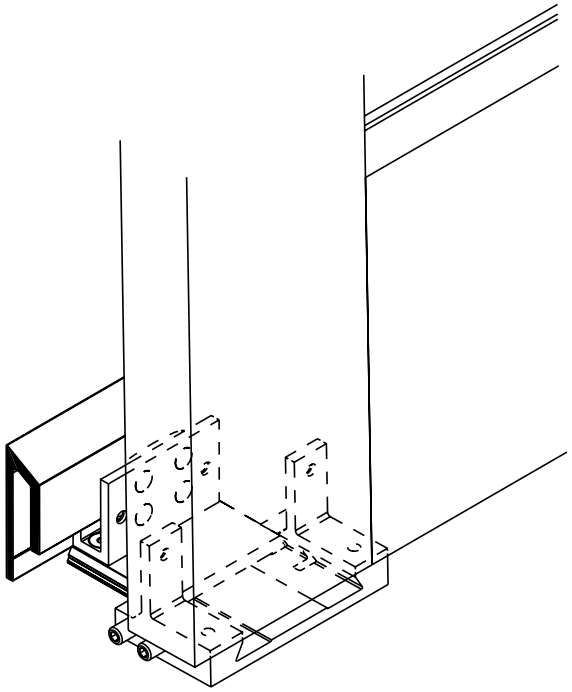

Guides for sliding shutters up to 3200 mm (10'6) in height and 140 kg (308 lbs.) maximum weight.

Description

These guides are certified in accordance with the appropriate EU standard (wind resistance class 6) and can be used for a wide variety of applications. They are designed for sliding shutters up to 3200 mm (10'6) in height and a maximum weight of 140 kg (308 lbs.). Sliding shutter installations with 1 to 4 leaves, telescopical and symmetrical, manual or with a drive, can be easily realized with a minimal number of parts.
Commercially available, anodized aluminum bottom guide profiles can be used in combination with guide slider 24542.

Guides for Hawa Frontslide

		mm/inch	code
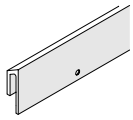	Bottom guide channel, alu plain anodized, predrilled	6000 (19'8 7/32")	24460
		cut to size	24462
	Floor guide unit, short, for bottom guide channel		24543
	Floor guide unit, long, for bottom guide channel		24544
	Screw-on guide slider		24542

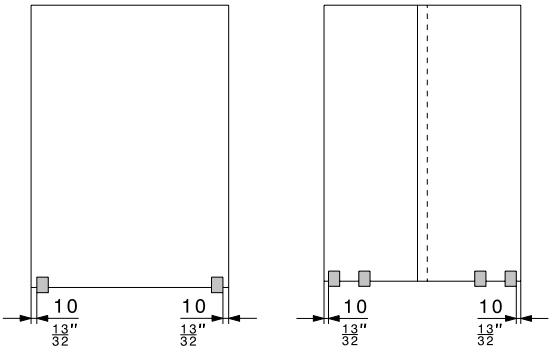

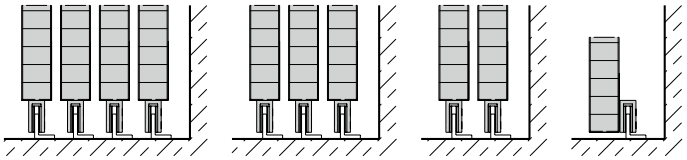

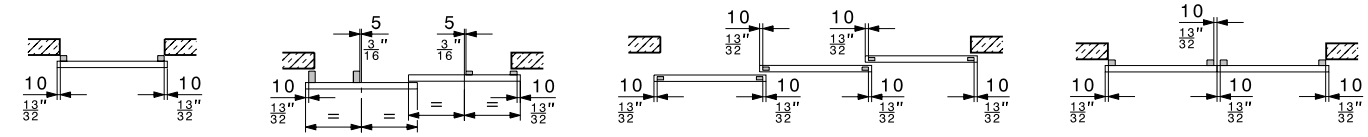

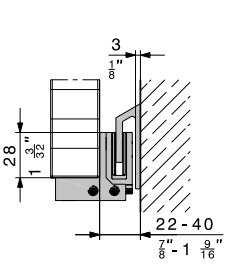

Floor guide 24543, bottom guide channels 24460/24462

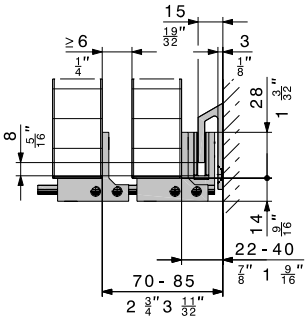

Floor guides 24543/24544, bottom guide channels 24460/24462

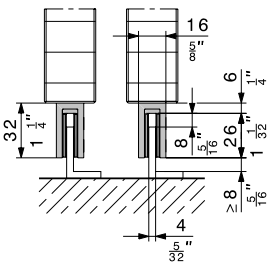

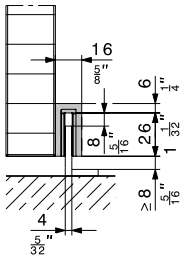

Guide slider 24542 from Hawa and commercially available, anodized aluminum bottom guide profile.

Subject to modification. Metric specifications are exact. Inches are approximate.

Overview of the guides for Hawa Frontslide

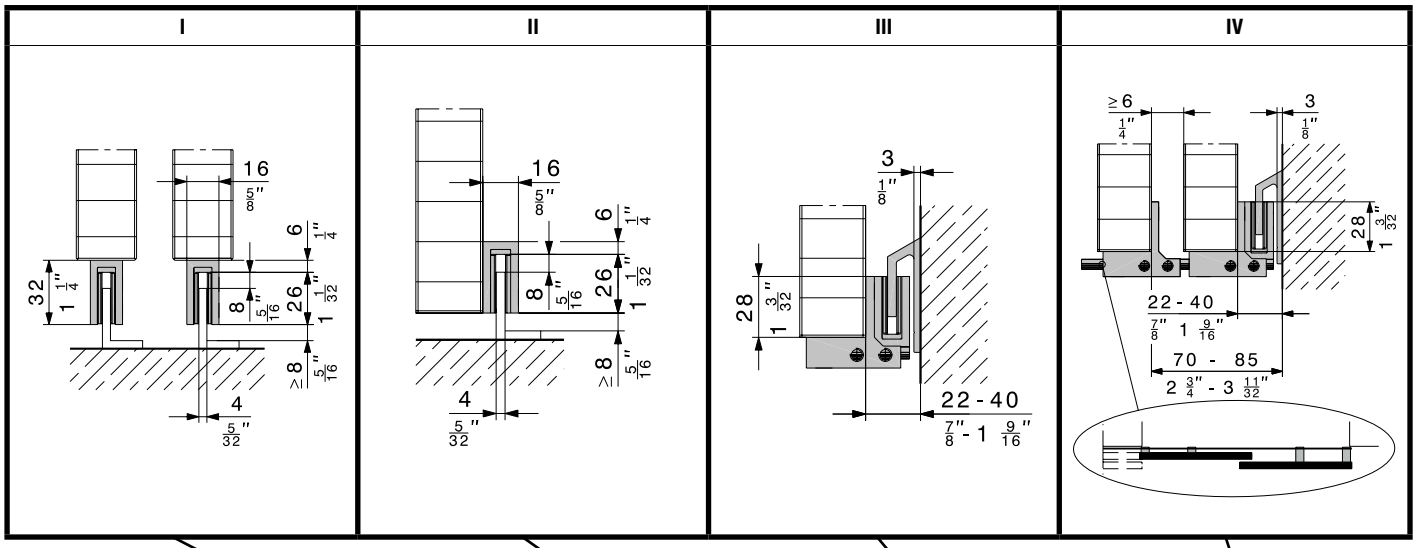

	I	II	III	IV
	✓	✓	✓	–
	✓	–	–	✓
	✓	–	–	–
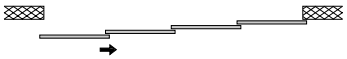	✓	–	–	–
	✓	✓	✓	–
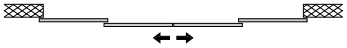	✓	–	–	✓
Guide arrangements: Certain guide options are freely adjustable. Further guide options available on request.	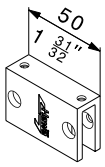 24542	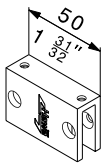 24542	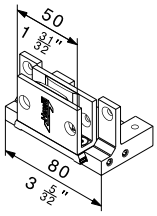 24543	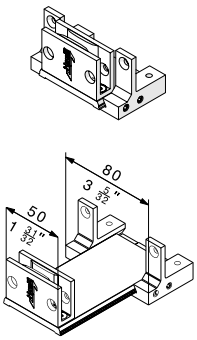 24543/24544
	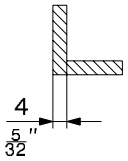 Alu profile anodized provided by others	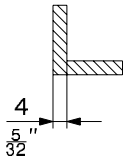 Alu profile anodized provided by others	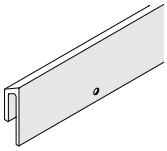 24460/24462	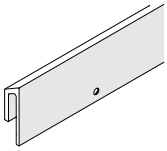 24460/24462

Subject to modification. Metric specifications are exact. Inches are approximate.

Sliding shutter locking

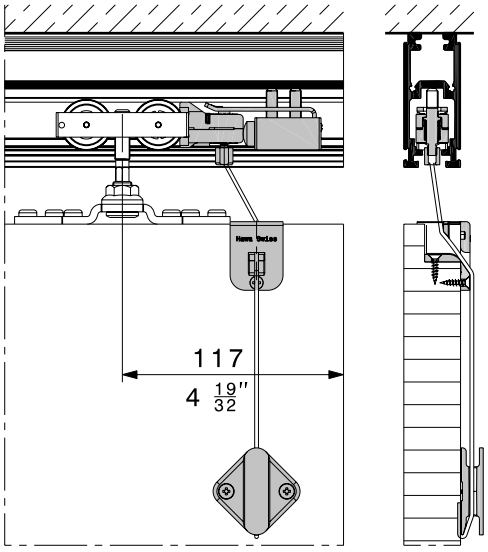

In combination with Hawa Frontslide 60 A

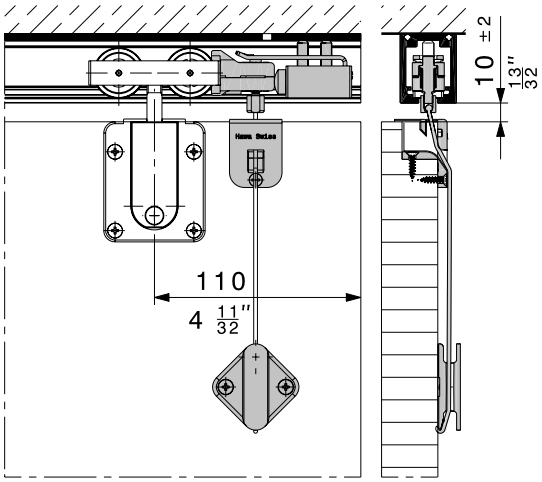

In combination with Hawa Frontslide 60 B

The sliding shutter lock prevents manually operated shutters weighing up to 60 kg (132 lbs.) from opening of their own accord.

Description

The sliding shutter lock for Hawa Frontslide 60 automatically engages as the shutters close and can be released from the room interior side only using a pull-cord. This sophisticated system prevents shutters from opening by themselves, even under the most adverse wind conditions.

Suitable for:

- Hawa Frontslide 60 A
- Hawa Frontslide 60 A Symmetric 2
- Hawa Frontslide 60 A Symmetric 2+2
- Hawa Frontslide 60 A Telescopic 2
- Hawa Frontslide 60 A Telescopic 3
- Hawa Frontslide 60 A Telescopic 4
- Hawa Frontslide 60 A with lower top track
- Hawa Frontslide 60 B

Sliding shutter locking

		code
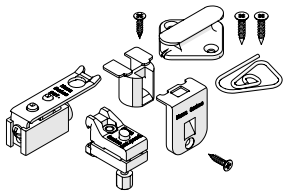	Sliding shutter locking complete, for Hawa Frontslide 60 A and 60/B	19319

Catch for sliding shutters

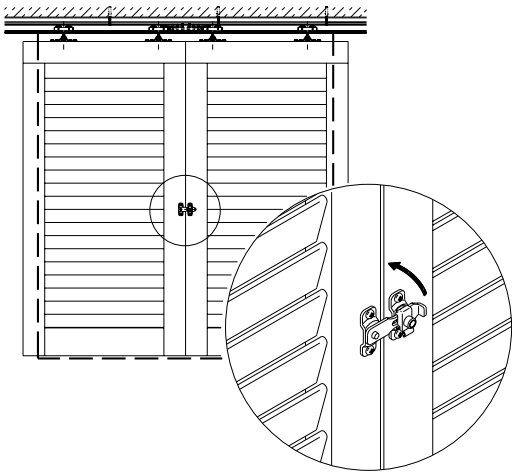

The sliding shutter catch keeps manually operated sliding shutters weighing up to 140 kg (308 lbs.) closed.

Description

The sliding shutter catch holds together adjacent shutter pairs, which is a further means to prevent shutters from opening by themselves.

Catch for sliding shutters

		code
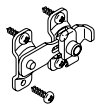	Catch for sliding shutters, stainless steel, with fixing screws	17155

Subject to modification. Metric specifications are exact. Inches are approximate.

Sliding shutter locking device

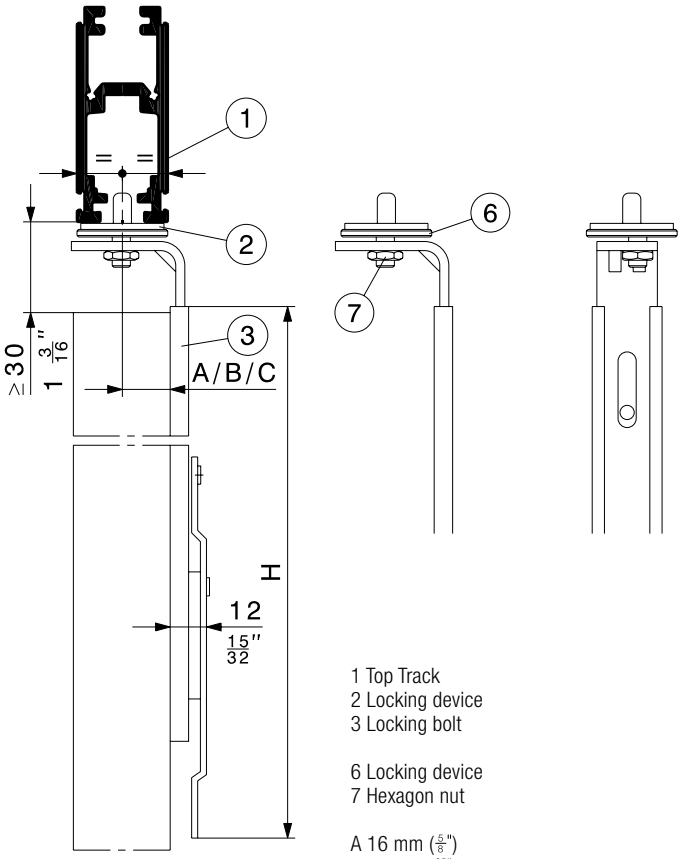

Hawa Frontslide 60 A

1 Top Track
2 Locking device
3 Locking bolt

6 Locking device
7 Hexagon nut

A 16 mm (5/8")
B 20 mm (25/32")
C 25 mm (1")

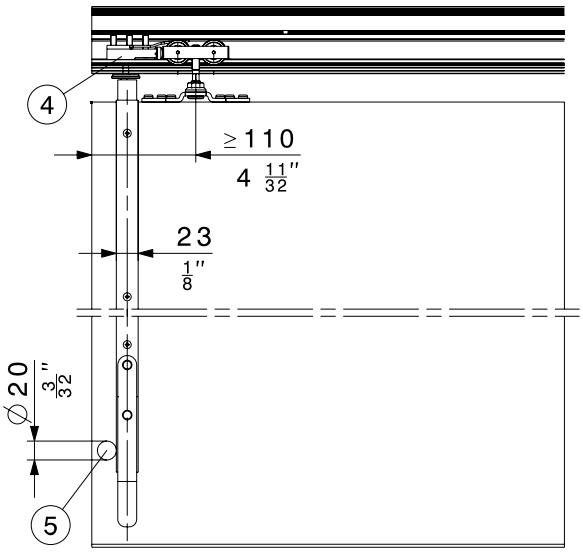

4 Track stop
5 Lock

Sliding shutter locking device for securing manually operated sliding shutters weighing up to 140 kg (308 lbs.)

Description

The sliding shutter locking device is designed to lock sliding shutters in any position on the track.
The locking device has an installation height of just 12 mm (15 screws on to any type of shutter with no need for milling work; the device is also suitable for retrospective fitting.
Two different lengths are available for an ideal gripping position.

Sliding shutter locking device

		mm/inch	code
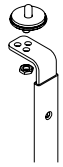	Sliding shutter locking device	800 (2'7 1/2")	23714
		1200 (3'11 1/4")	23715

Further application examples

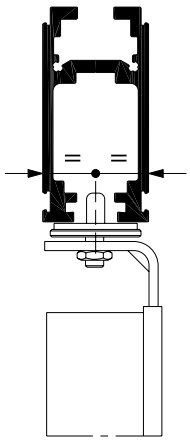

Hawa Frontslide 100 A

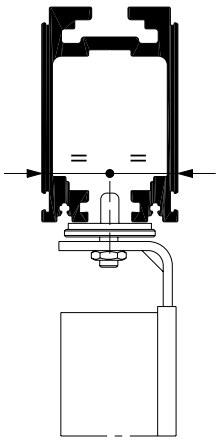

Hawa Frontslide 140 A

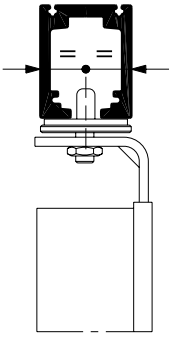

Hawa Frontslide 60 A
with lower top track

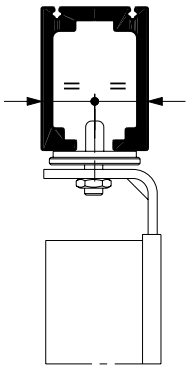

Hawa Frontslide 100 A with
lower top track

Subject to modification. Metric specifications are exact. Inches are approximate.

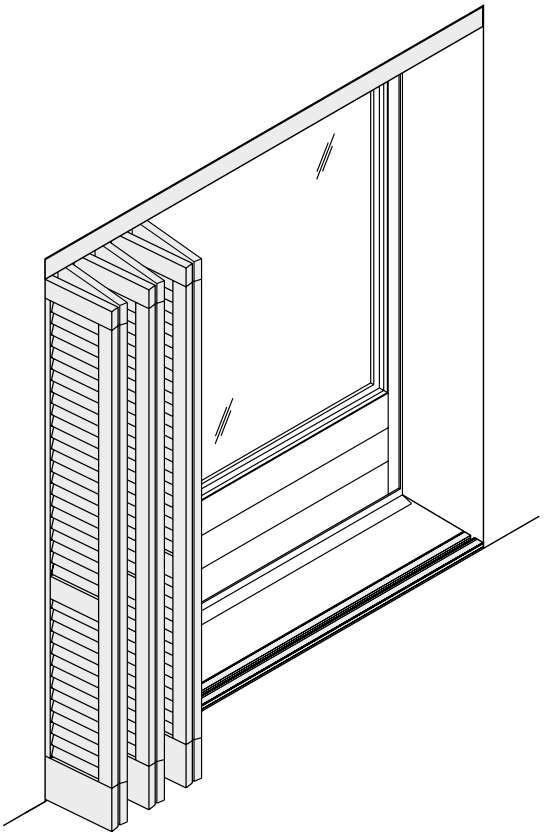

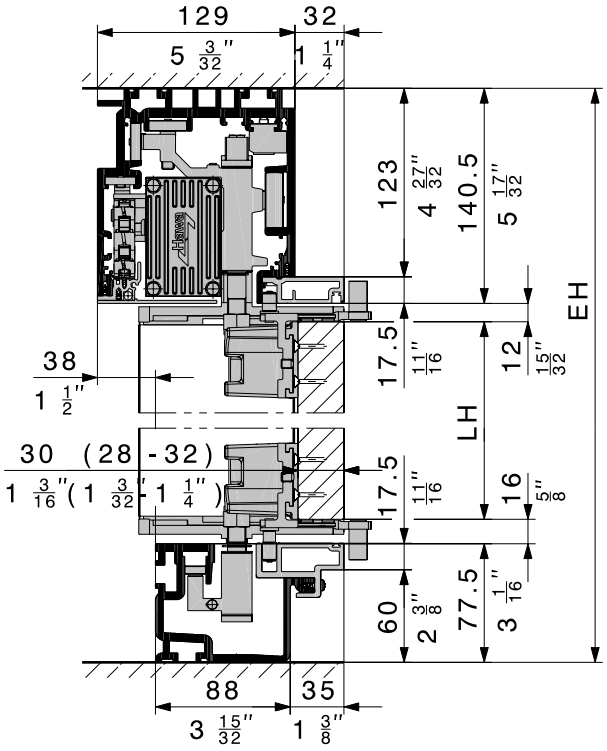

Folding sliding shutters – automatic flush front.

Automated hardware system for flush-front folding sliding shutters weighing up to 30 kg (66 lbs.).

Description

Hawa Frontego 30 Matic is a motorised hardware system for folding sliding shutters. A well-thought-out suspension system enables a flush-front construction and extensive freedom of design for the façade. A variety of mounting options leave virtually no wish unfulfilled. The automatic hardware system folds up to six sliding shutters and parks the package to one side at 90° to the slide axis. The drive system is powered by a brushless electric motor with a high-quality gear system and a proven drive belt; it is both wear-resistant and durable. The power supply unit (to be connected on site by others) with integrated feed and distribution and the Hirschmann plug do not need any additional connection cables. The electrical installation therefore corresponds to the usual standard for sunblind designs incorporating commercially available operating elements.

Applications

Wherever sun and privacy screen are an integral aspect of façade design, including façades with a high proportion of glass, even when space is at a premium, for instance in schools, hotels, public buildings, office and administration buildings, low-energy houses and for creative and impressive façades on private homes.

Features of the Hawa Frontego 30 Matic

- Drive unit: CE tested
- Hardware system developed in accordance with DIN EN 13659, which regulates performance and safety requirements as well as wind load resistance (certified for Class 6, tested for Class 8), durability (20,000 cycles, tested for Class 3)
- Protection and safety measures on the basis of DIN EN 12453
- The hardware system for automatic folding sliding shutters is suitable for purposes up to protection class 3 in accordance with VFF pamphlet KB.01
- Very high corrosion resistance; suitable for coastal areas; materials and coatings tested during a 1,000-hour salt spray test in accordance with DIN EN 9227
- Folding sliding shutter weight: max. 30 kg (66 lbs.)
- Folding sliding shutter width: 300–600 mm ($11\frac{13}{16}$"–$1'11\frac{5}{8}$") (uniform for each installation)
- Folding sliding shutter thickness: 28–32 mm ($1\frac{1}{8}$"–$1\frac{9}{32}$")
- Designs: 2, 4 and 6 leaves, left or right hand application
- Symmetrical and asymmetrical installations are freely combinable
- Ceiling, window lintel, wall and façade mounting
- Folding sliding shutters and the top tracks and bottom guide channels can be installed from the inside or outside
- For folding sliding shutters made of wood, metal or fabric
- Folding sliding shutters can be locked top and bottom in any position
- Robust, burglar-deterrent engineering and self-locking drive
- Folding sliding shutters form a flush front when closed

Drive unit technical details: → page 32

Subject to modification. Metric specifications are exact. Inches are approximate.

Hawa Frontego 30 Matic drive system

Hawa Frontego 30 Matic moves folding sliding shutters at an aver-age speed of 55 mm/s.
The intelligent control system was designed specifically for folding sliding shutters and enables them to be slowly accelerated up to an ideal speed and then gently decelerated and stopped. This keeps noise levels down and puts less strain on drive components. Commissioning is as convenient as it is simple: manual addressing is unnecessary thanks to the automatic detection of components such as the number of leaf pairs and left or right hand installation. Manual configuration using the diagnosis box is also possible.

Caution: Not permitted for escape routes

Escape route will be blocked if power supply fails when shutters are closed.

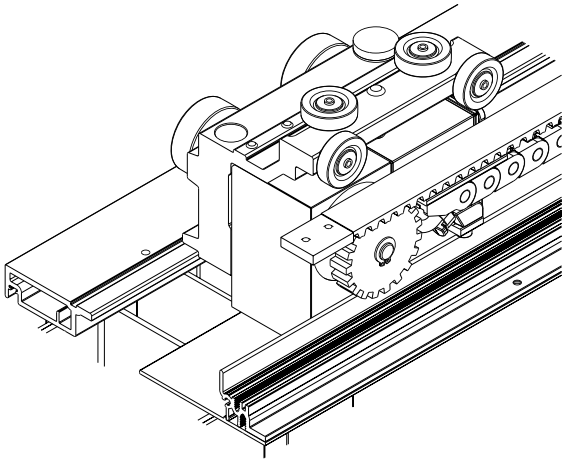

The drive and trolley form a compact unit

Addressing and controlling the system

The systems are addressed in the same way as rolling shutters systems and operated via commercially available sunblind switches. Push-button operation is also possible for walk-in systems.

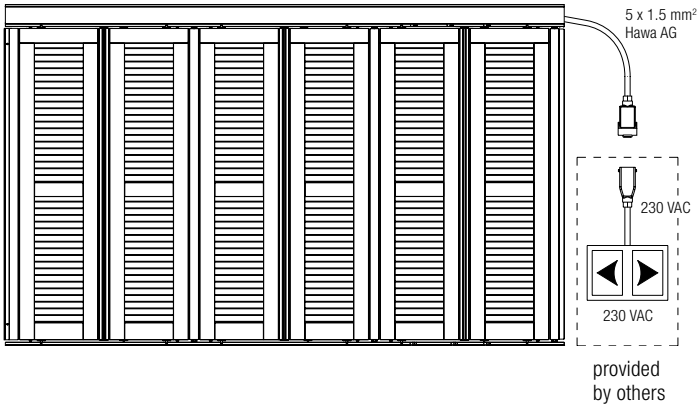

Technical details Hawa Frontego 30 Matic

• Drive unit:	CE tested
• Power supply:	100 VAC to 240 VAC
• Rated voltage:	28 V
• Pre-fuse (max.):	16 A
• Overvoltage category:	II
• Temperature range for storage:	-25 °C to 60 °C
• Temperature range for operation:	-20 °C to 60 °C
• Relative humidity:	20 % to 98 %
• Degree of contamination:	1
• Protection class:	IP54
• Speed (max.):	70 mm/s
• Average speed:	55 mm/s
• Static continuous drive force (max.):	150 N
• Static peak drive force (max.):	250 N (Anfahren bei Wind)
• Average drive power consumption:	20 W
• Power consumption in standby mode:	< 5 W
• Parameterisation:	automatic during hard-ware commissioning or manual using the diagnosis box

Type label

Every drive and power supply unit has a type lable.

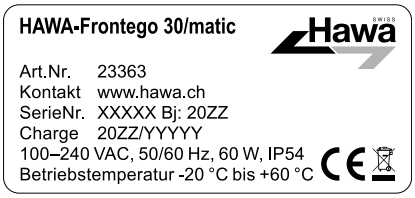

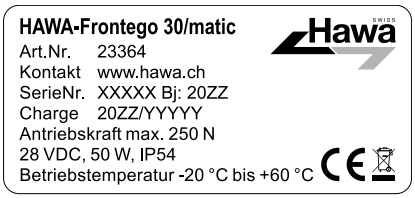

Commissioning box

The commissioning box for the Hawa Frontego 30 Matic is available as an option and enables simple commissioning via the main cable and Hirschmann plug.

Diagnosis box

The diagnosis box for the Hawa Frontego 30 Matic is an option and offers the following benefits:

- Read out of important operating data such as operation and run-time, firmware version, error messages, etc.
- Firmware updates
- System operation

Subject to modification. Metric specifications are exact. Inches are approximate.

Folding sliding shutters

The Hawa Frontego 30 Matic stands for freedom of design in façade construction. The folding sliding shutters form a flush front with the façade when closed to conceal the top tracks and bottom guide channels. Shutters can be made of different materials such as metal, wood or fabric.
The number of shutters per system is limited to six leaves, or three pairs. The option to design left or right hand installations allows for any combination of symmetrical and asymmetrical systems. Every sub-system can be designed with a different folding sliding shutter width.

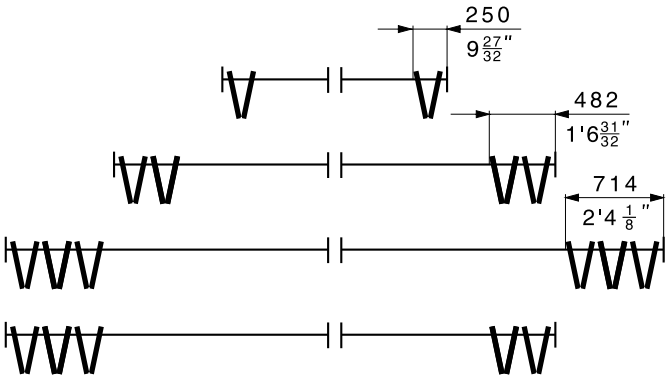

Open folding sliding shutters

The folding package stands sideways, slightly opened, at 90° to the sliding axis. Guide width of folding packages (including wall connection) for left-hand or right-hand systems with a maximum shutter thickness of 32 mm (1 17/64"):

- 2 panels: 176 mm (6 15/16") (+74 mm (2 29/32"))
- 4 panels: 408 mm (1'4 1/16") (+74 mm (2 29/32"))
- 6 panels: 640 mm (2'1 7/32") (+74 mm (2 29/32"))

57 mm (2 1/4") need to be added for right-hand partial systems that are a component of an overall symmetrical or asymmetrical system. (The driver is the protection profile actuator).

Folding sliding shutters in the wind

Wind is an unavoidable element of façade construction and worthy of special attention, especially in connection with folding sliding shutters. Hawa Frontego 30 Matic is able to resist strong wind pressure both when open and closed thanks to integrated wind supports.

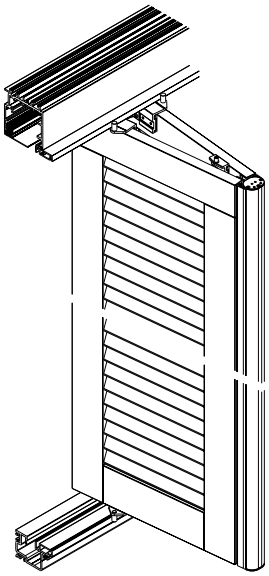

The slightly open folding paket resists even the most adverse wind conditions.

Security and locking

Hawa Frontego 30 Matic is a tried and tested, reliable system offering the greatest possible security.

- The system stops and reverses when it encounters an obstacle
- Robust, burglar-deterrent engineering and self-locking drive
- Optional integration of sun and wind detectors
- Shutters can be blocked in any position top and bottom
- The system is automatically locked when in the closed position

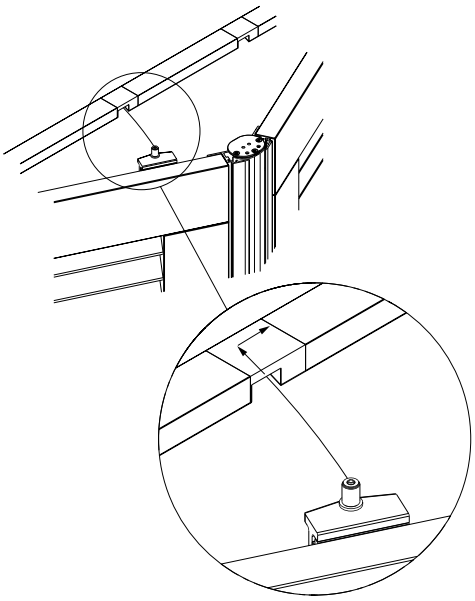

The entry pieces lock the system firmly when it is closed

Wall connection and opposite side

The wall connection profile has room for the 28 V power supply unit; together with the one-sided screen profile it provides for a high degree of security as well as protection against crushing and light intrusion. An optional end profile for the opposite side in combination with a standard profile (provided by others) compensates structural differences in dimensions to achieve a uniform façade appearance.

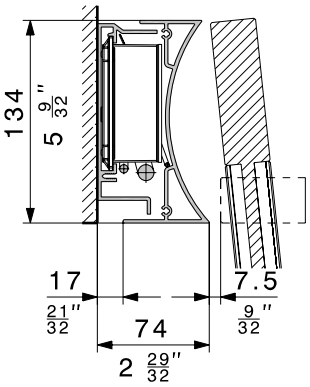

Wall connection including 28 V power supply unit

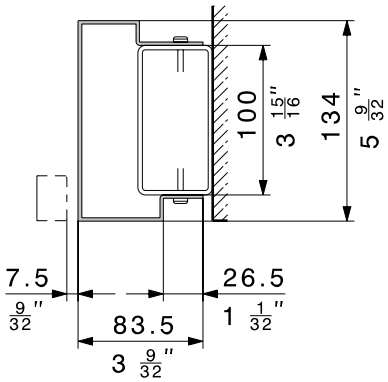

End profile with standard profile provided by others

Subject to modification. Metric specifications are exact. Inches are approximate.

Top track

The top track for the Hawa Frontego 30 Matic is designed for ceiling and wall mounting. Attachment points are required at least every two metres. The top track is easily installed with hammer head bolts (28/15) thanks to integrated T-grooves. Drilling the top tracks to anchor sleeves is also a convenient fastening method.

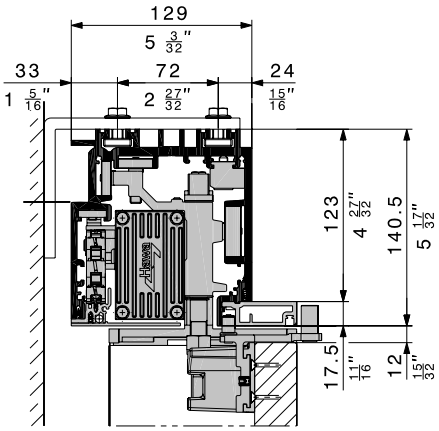

Wall mounting with brackets and hammer head bolts provided by others

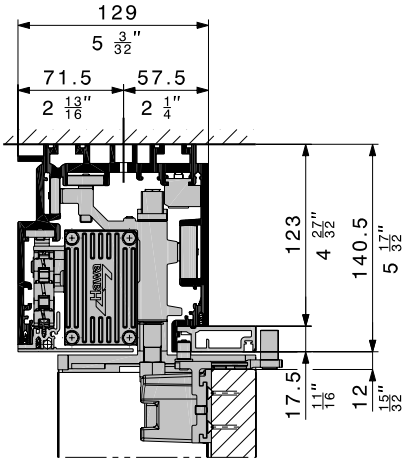

Ceiling mounting with anchors

Bottom guide

The bottom guide is designed for either wall mounting or countersinking in the floor. A removable floor plate can be used to reduce the distance between floor and guide channel. Attachment points are required at least every two metres. The guide channel is easily installed with hammer head bolts (28/15) thanks to integrated T-grooves. Drilling the guide channels to anchor sleeves is also a convenient fastening method. The guide channel is crush-resistant and therefore safe and stable to stand on.

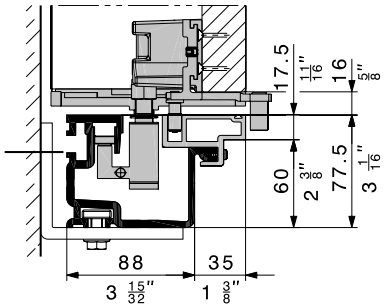

Wall mounting with brackets and hammer head bolts provided by others

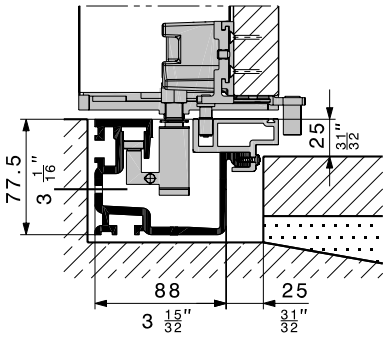

Wall mounting with anchor, removable floor plate

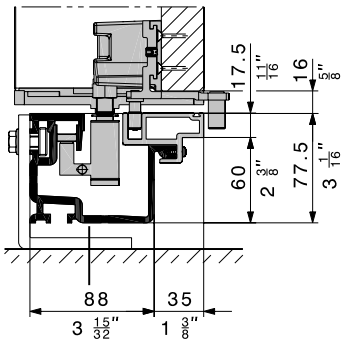

Floor mounting with brackets and hammer head bolts provided by others

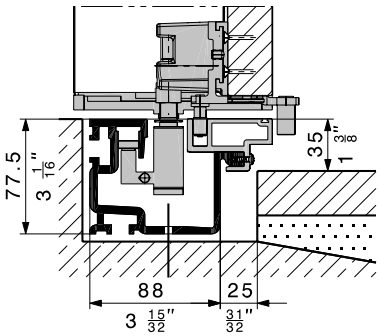

Floor mounting with anchor, fixed floor plate

Subject to modification. Metric specifications are exact. Inches are approximate.

Screen profile, double hinge and hinge

The screen profile not only optimises shading but also provides the best possible crush protection in conjunction with the double hinge for the greatest possible crush protection for walk-in systems. The economically favourable hinges and light screen profiles can be used for non-walk-in systems. In the interest of a uniform façade appearance, however, walk-in and non-walk-in systems should not be combined.

Walk-in system

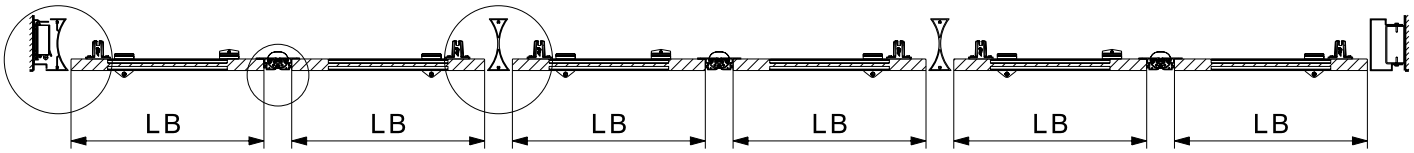

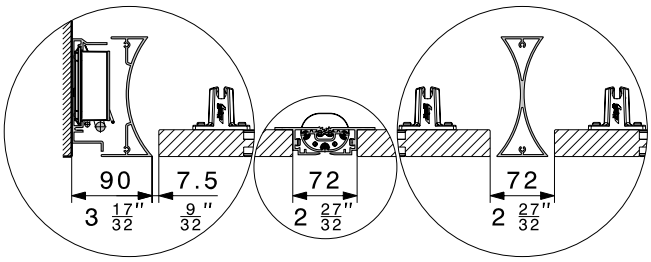

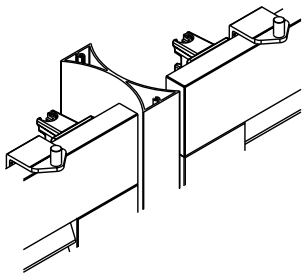

Screen profile, two-sided

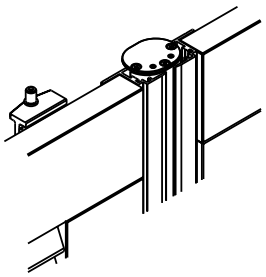

Double hinge

Non-walk-in system

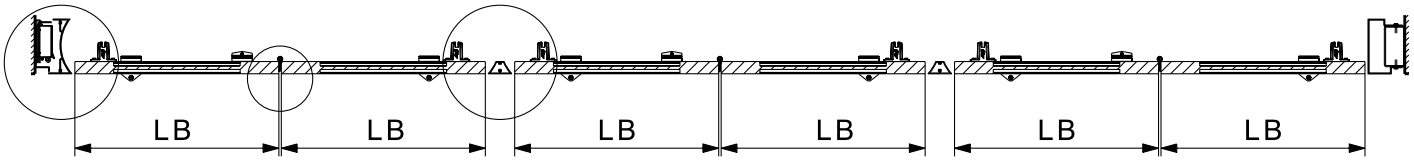

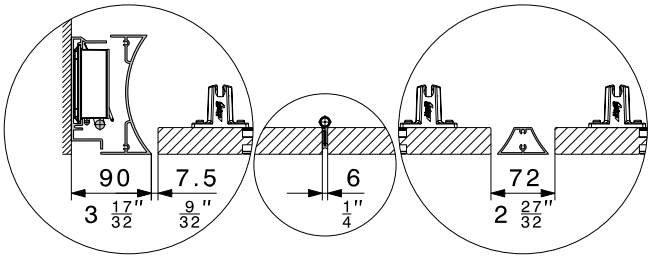

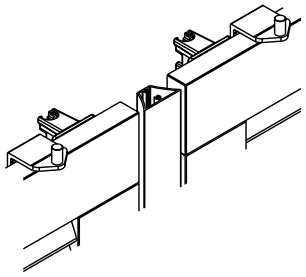

Light screen profile

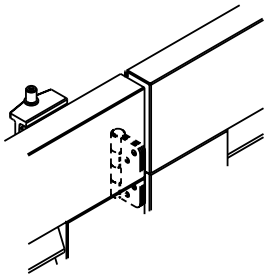

Hinge

Subject to modification. Metric specifications are exact. Inches are approximate.

Proof of resistance to wind/climatic impact

Hawa Frontego 30 Matic was tested and certified by ift Rosenheim/ Germany as follows:

- System: 6 panel, guided
- Folding sliding shutter weight: 30 kg (66 lbs.)
- Folding sliding shutter dimensions: 550 mm x 2322 mm*
- System dimensions: 3620 mm x 2610 mm

* The test was carried out with corrected wind loads for a maximum folding sliding shutter size of 600 mm x 3200 mm.

Resistance to wind loads

- Test report 11-002875-PR01
- Class 6*
- ift Rosenheim, 17 January 2013

* Tested for Wind Class 8; not a wind resistance class as per product standard.

Resistance to dynamic wind loads

- Test report 11-002875-PR01
- Angle of incidence 90°, shutters closed: 35 m/s (approx. 126 km/h = approx. 78 miles/h)*
- Angle of incidence 0°, shutters open: 35 m/s (approx. 126 km/h = approx. 78 miles/h)*
- ift Rosenheim, 17 January 2013

* Maximum wind speed at the test institute.

Wind classes

Wind class	1	2	3	4	5	6	[8][(1)]
Wind speed in m/s	9.0	10.7	12.8	16.7	21.0	25.6	35.0
Wind speed in km/h	32.5	38.5	46.0	60.0	76.0	92.0	126.0
Rated test pressure in accordancewith SN EN 13659 N/m²	50	70	100	170	270	400	750
Safety test pressure in N/m²	75	100	150	250	400	600	1125
Wind strength in accordance with Beaufort	5	6	7	8	9	10	12

(1) Not a wind resistance class as per product standard. Certified by ift Rosenheim..

Functionality test under climatic impact

- Test report 11-002875-PR01
- Stress test 1: 5 cycles -20 °C / +60 °C
- Stress test 2: 5 cycles room temperature / +70 °C (irradiation)
- ift Rosenheim, 17 January 2013

Test in accordance with VFF pamphlet KB.01

Hardware system for power-operated folding sliding shutters in accordance with VFF pamphlet KB.01.

- Test report 13-001578-PR02
- Protection class 3 suitable for uses in accordance with VFF pamphlet KB.01
- ift Rosenheim, 7 October 2013

Planning/installation

Advice and installation through authorised installers. Please contact Hawa for further information.

New design options for façades:

Hawa Aperto 60 H for stackable wooden sliding shutters up to 60 kg (132 lbs.).

The principle

No matter how beautiful sliding hardware may be, it can at times be desirable to see slightly less of it. This is where Hawa Aperto 60 H fits in perfectly. The system closes flush to provide a smooth cover over large glazed areas, allowing the shutters to be stacked away with ease and elegance. They offer no working surface for the wind when stacked parallel to the façade. However, they can also be stacked at a space-saving 90° to the running direction, for instance in a balcony alcove. Hawa Aperto 60 H is tremendously flexible and thus virtually predestined for individual designs and special solutions. Please feel welcome to contact us – we will be pleased to help you to implement your ideas.

The benefits

- The first system on the market of parallel or 90° stacking wooden siliding shutters
- Provides shade for even the broadest window frontages
- Installations present a flush front when closed
- Excellent running characteristics, shutters can be moved individually and positioned anywhere
- Flexible, individual and durable design using corrosion-resistant materials

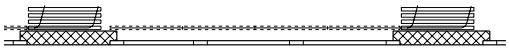

Example stacking parallel to the slide axis:
Optimal space utilisation.

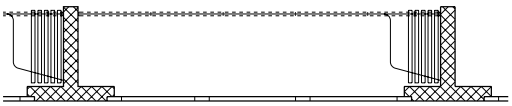

Example stacking 90° to the slide axis:
The shutters run in front the parapet and provide shade on the balcony.

Subject to modification. Metric specifications are exact. Inches are approximate.

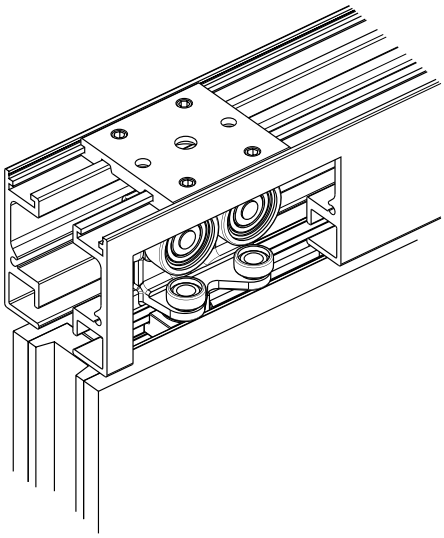

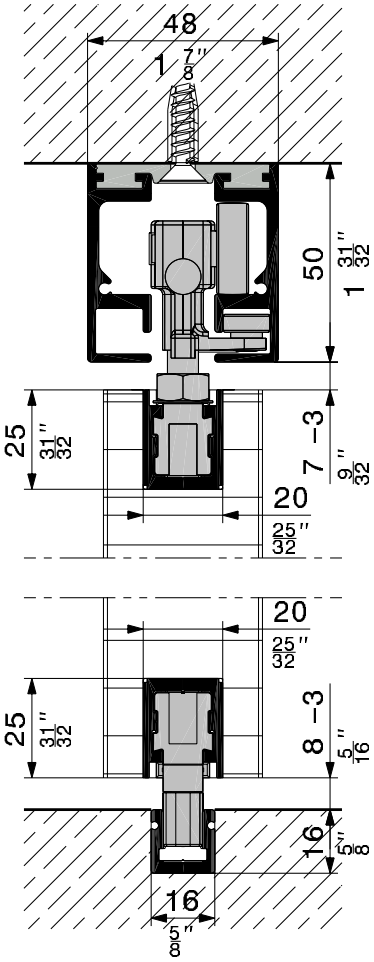

Subject to modification. Metric specifications are exact. Inches are approximate.

Hawa Sliding Solutions AG
Untere Fischbachstrasse 4, 8932 Mettmenstetten, Switzerland
Phone +41 44 787 17 17, Fax +41 44 787 17 18
info@hawa.com, www.hawa.com

Subject to technical modifications. 20896/01.2021 english © Hawa Sliding Solutions AG